Cryocooler System to Science Instrument (SI) ICD (CRYO_SI_01)

Level: 3

Document Number: APP-DA-ICD-SE03-2059

Date: April 15, 2015
Revision: –

AFRC
Armstrong Flight Research Center
Edwards, CA 93523

ARC
Ames Research Center
Moffett Field, CA 94035

German Space Agency, DLR
Deutsches Zentrum für Luft und Raumfahrt

Cryocooler System to Science Instrument (SI) ICD (CRYO_SI_01)

AUTHOR:

SETI Institute / Stefan Rosner, Science Instrument Engineer	4/15/2015 Date

CONCURRENCE:

NASA / Paul Fusco, Cryocooler System Development PM	4-15-2015 Date
NASA / Edward Ingraham, SMA Lead	4/17/2015 Date
NASA / Michael Toberman, Operations Director	4/16-15 Date
USRA / Erick Young, Science Mission Operations Director	4/4/15 Date
NASA/Vacant, SE&I Lead	4/16/2015 Date

APPROVAL:

NASA/John Baca, Observatory Systems Director	4-16-2015 Date
DLR / Heinz Hammes, Project Engineer	2015-05-06 Date

Revision History

REV	DATE	DESCRIPTION	APPROVAL
0.1	11/28/2014	Initial Cryocooler CDR draft release for review and comment.	
0.2	12/2/2014	Updated draft addressing comments submitted by P. Fusco, G. Sasaki and B. Szchur (included in CDR Data Package).	
0.3	4/7/2015	Updated draft for ERB review including updates to pin-out for 55 contact connector [Fig. 4.2.5-2 and Table 4.2.5-1] and corrections / specification for momentary discrete contact state transitions in section 4.2.5.1. Updates to reflect change from hard-wired relay logic implementation to PLC-based implementation. Add photodocumentation of aircraft installations.	
–	4/15/2015	Initial release of approved document per OCCB-CCR-0363.	OCCB

Cryocooler System to Science Instrument (SI) ICD (CRYO_SI_01)

Table of Contents

1. SCOPE 1

2. PURPOSE 3

3. REFERENCE DOCUMENTS 3

4. CRYOCOOLER SYSTEM TO SCIENCE INSTRUMENT (SI) INTERFACES 4

4.1. CRYOCOOLER SYSTEM TO SI COMPRESSED HE QD FLUIDIC INTERFACES 4
4.2. CRYOCOOLER CONTROL SYSTEM & ELECTRICAL / ELECTRONIC INTERFACES 9
4.2.1. Control System-to-Compressor Interface 11
4.2.2. Control System Power Start/Stop Logic 13
4.2.3. Control System Signal Conditioning, Warnings & Alarms 13
4.2.4. Cryocooler System to SI Electrical Power Interfaces 15
4.2.5. Cryocooler System to SI Electronic Signal Interfaces 16
4.2.5.1. Cryocooler System to SI Electronic Command & Status Discrete Signal Interfaces 22
4.2.5.2. Cryocooler System to SI Electronic Status & Monitoring Analog Signal Interfaces 22

5. SAFETY HAZARDS 22

6. CRYOCOOLER COMPRESSOR INSTALLATION AND SI ENVELOPE CONSIDERATIONS 23

APPENDIX A. ACRONYMS AND ABBREVIATIONS 27

APPENDIX B. INTERFACE HARDWARE DATA SHEETS 29

Cryocooler System to Science Instrument (SI) ICD (CRYO_SI_01)

1. SCOPE

The scope of this Interface Control Document (ICD) is to define, document and control the interface requirements between the Cryocooler System and SOFIA Science Instruments (SIs) that use Closed-Cycle Cryocoolers (CCCs) to achieve cryogenic temperatures for their focal plane array detectors while operating aboard the Boeing 747SP aircraft as part of the integrated SOFIA observatory.

The initial Phase 1 implementation of the Cryocooler System is designed specifically to service the upGREAT Low Frequency Array (LFA) channel cryostat. However, this ICD will present certain features and interfaces that anticipate future integration and operation of the upGREAT High Frequency Array (HFA) channel cryostat, and potentially even other SIs that use CCC cooling.

The functionality and performance of Phase 1 of the Cryocooler System is defined within SE01-2076, upGREAT Cryocooler System Specification. The Cryocooler System-to-Aircraft System interfaces are defined and controlled by SE03-2060, SOFIA Cryocooler System to Aircraft System ICD (CRYO_AS_01).

It is anticipated that future enhancements of the Cryocooler System will result in a more permanently installed SOFIA facility-class observatory mission system and/or an expanded system that can simultaneously service multiple SI cryostats / cold heads.

Figure 1-1 depicts the upGREAT Cryocooler System, Phase 1, identifying the major components needed to support one (1) upGREAT channel cryostat, initially the Low Frequency Array (LFA).

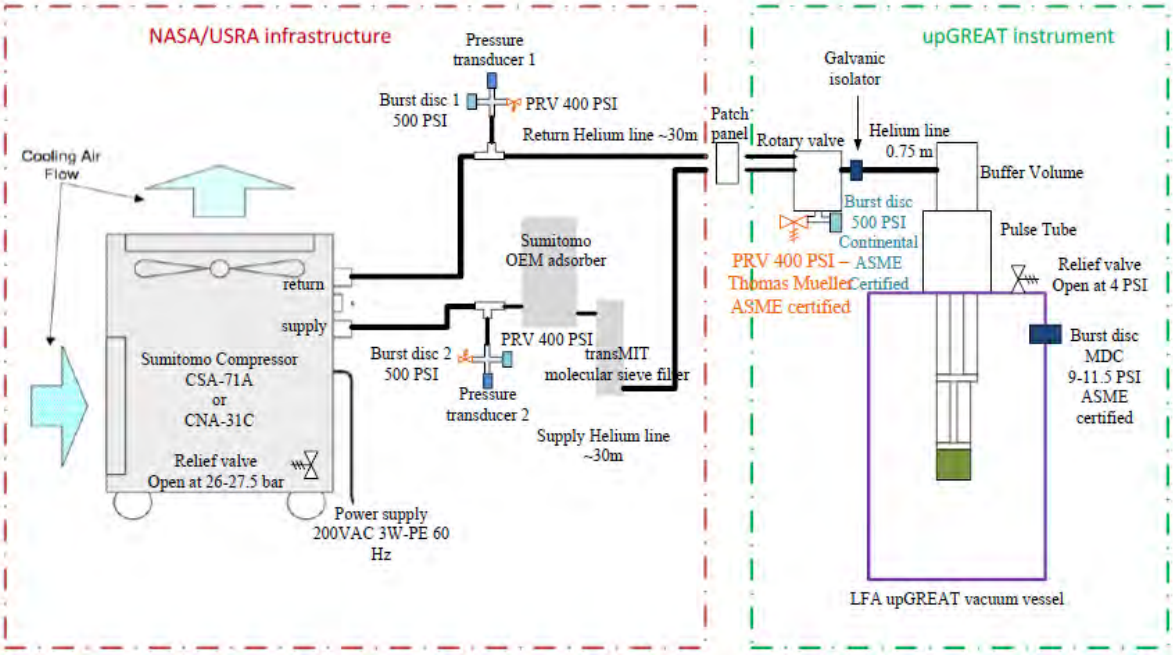

Figure 1-1 upGREAT Cryocooler Phase 1 System, identifying the major components needed to support the upGREAT LFA (or HFA) channel cryostat

Figure 1-2 presents a context diagram, showing the upGREAT Phase 1 Cryocooler System, with one (1) He compressor supporting the upGREAT LFA channel cryostat.

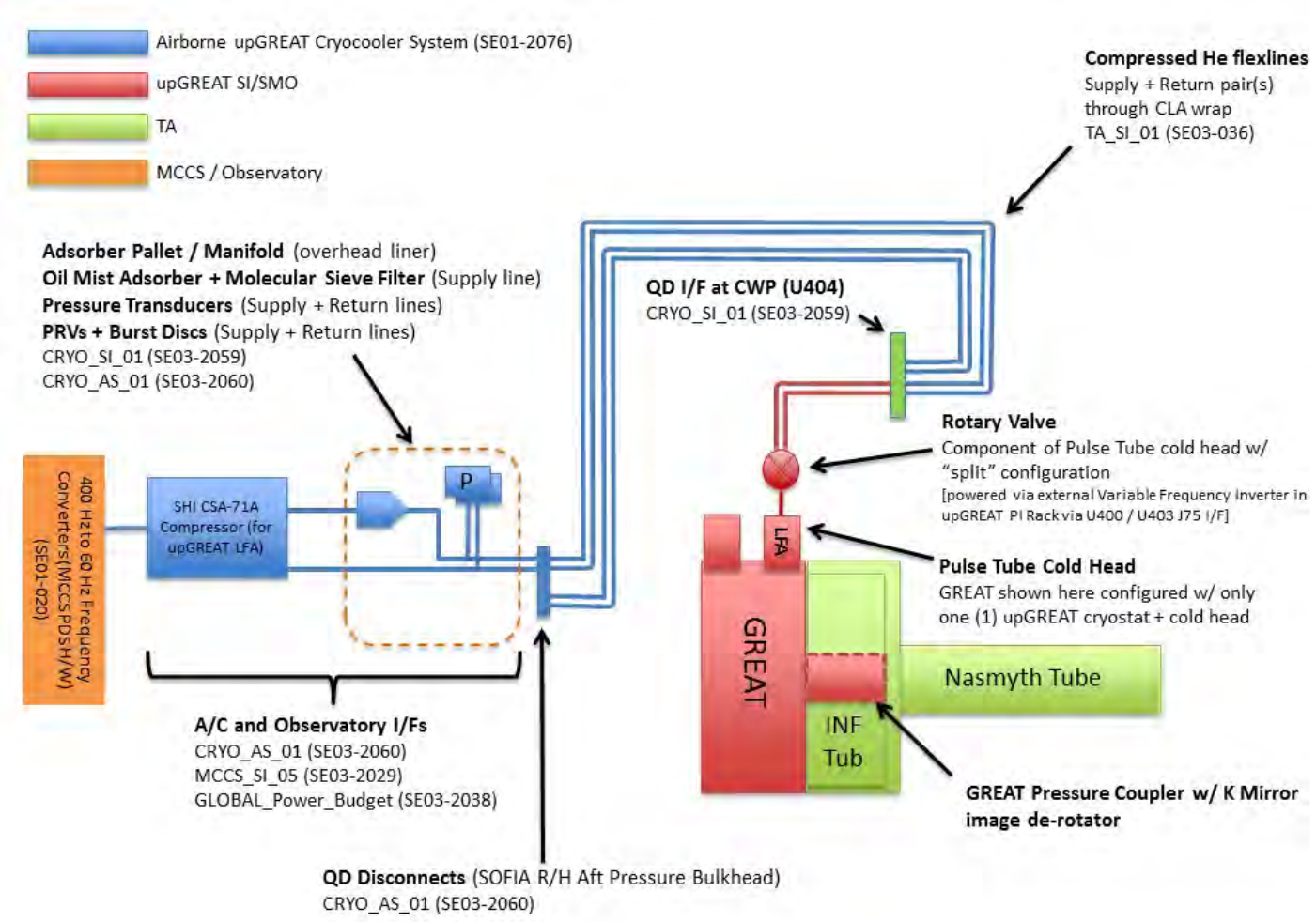

Figure 1-2 Context diagram of the upGREAT Phase 1 Cryocooler System, identifying the relevant interfaces to other SOFIA subsystems, and identifying the applicable ICDs

Blue items indicate elements of the Cryocooler System, including compressed He lines wrapped through the CLA, while red indicates upGREAT SI elements, not within the scope of the Cryocooler System.

Not shown in the diagram above are the analog and discrete signal lines between the Cryocooler control system and the upGREAT PI Rack, or the 3-phase power interface from a variable frequency inverter in the upGREAT PI Rack to the Pulse Tube cold head rotary valve (20 mA / phase steady-state, with inrush transients of about 40

~ 50 mA / phase) routed through the CLA via multiple #20 AWG Twisted Shielded Pair (TSP) interfaces within J75 from U400 to U403 via the L/H CLA Disconnect Panel U4.

2. PURPOSE

The purpose of this document is to define the electrical power, electronic signaling, and fluidic interfaces between the Cryocooler System and the Science Instruments (SIs) to ensure proper and safe operations of the integrated system aboard the SOFIA observatory.

3. REFERENCE DOCUMENTS

APP-DA-SPE-SE01-2076	upGREAT Cryocooler System Specification
APP-DA-PLA-PM17-2076	upGREAT Cryocooler System Concept of Operations
SOF-DA-ICD-SE03-036	Cable Load Alleviator Device / Science Instrument Cable Interface (TA_SI_01)
SOF-AR-ICD-SE03-2015	PI Equipment to PI Rack to Aircraft Interface ICD (SI_AS_01)
SOF-AR-ICD-SE03-2029	Principal Investigator Patch Panel to Principal Investigator Equipment Rack(s) Interface (MCCS_SI_05)
APP-DF-ICD-SE03-2060	upGREAT Cryocooler System to Aircraft System ICD (CRYO_AS_01)
APP-DF-ICD-SE03-2038	Global Power Budget Interface Control Document
SOF-DA-ICD-SE03-002	Science Instrument Envelope (GLOBAL_09)
SOF-NASA-DWG-SE02-3661	SOFIA Cryocooler Control System Cables and System Wiring, Sheet 5 of 6, Control System Enclosure to SI PI Rack Cable
A9747-9701-M1007	TA/CLA Hose Mounting Hardware
SOF-DWG-MG-4300.0.00 R05	Balancing Subassembly
APP-DF-REP-PA06-2031	Cryocooler System Failure Modes and Effects Analysis (FMEA)
APP-DF-ICD-SE03-2038	Global Power Budget Interface Control Document
APP-DF-LIS-SE03-2042	Platform Parameter List
APP-DA-PLA-PM17-2078	"24/7" Power and Network Connectivity between Flights Concept of Operations
GH 2225 001	upGREAT Cryostat System Safety Assessment (SSA)
GI 2225 001	upGREAT Pulse Tube Pressure Test Plan
NPD 8710.5	Policy for Pressure Vessels and Pressurized Systems (PVS)
NASA-STD-8719.17	NASA Technical Standard, Requirements for Ground-Based Pressure Vessels and Pressurized Systems (PVS)
APP-DA-DWG-SE02-3474	Cryocooler Compressor System Installation
APP-DA-DWG-SE02-3648	Cryocooler Compressor Safety Rails Assembly and Details
APP-DA-DWG-SE02-3655	Adsorber Installation
APP-DA-DWG-SE02-3475	Compressor Pivot Frame Assembly
APP-DA-DWG-SE02-3476	Adsorber Assembly and Details
DCP-S-065	Dryden Centerwide Procedure, Pressure Vessels & Pressurized Systems (PVS)
UGA-2200-004	upGREAT Closed-Cycle Coolers Feasibility Study
UGA-2200-006	upGREAT Closed-Cycle Coolers Specification

4. CRYOCOOLER SYSTEM TO SCIENCE INSTRUMENT (SI) INTERFACES

The Cryocooler System interfaces with the Science Instrument (SI) via compressed He (gas) lines, as well as electrical power and electronic signaling interconnections. Some of these interfaces may not be used in every SI configuration. These interfaces are defined within the following subsections.

4.1. Cryocooler System to SI Compressed He QD Fluidic Interfaces

The Cryocooler System compressor provides a source of very pure, pressurized He gas to the cold head and cryostat of a mated SI via a Supply / Return pair of self-sealing Quick Disconnect (QD) fittings. When the compressor is operating, a pressure differential is generated between the High Pressure Supply QD and the Low Pressure Return QD.

The Cryocooler-to-SI compressed He QD interface demark is located at the U404 patch panel, which mounted just aft of the Counterweight Plate (CWP), adjacent and orthogonal to the U402 and U402A TA Patch Panels (electrical power and grounding interfaces).

The U404 patch panel design is per drawing A9747-9701-M1007, TA/CLA Hose Mounting Hardware.

The routing of compressed He flex lines from the compressor to the Cryocooler-to-SI QD interface is documented within SE03-2060 (CRYO_AS_01) and SE03-036 (TA_SI_01).

Figure 4.1-1 presents an aft-facing view of the TA, showing the location of the U404 interface demark, relative to the SI and several other patch panels.

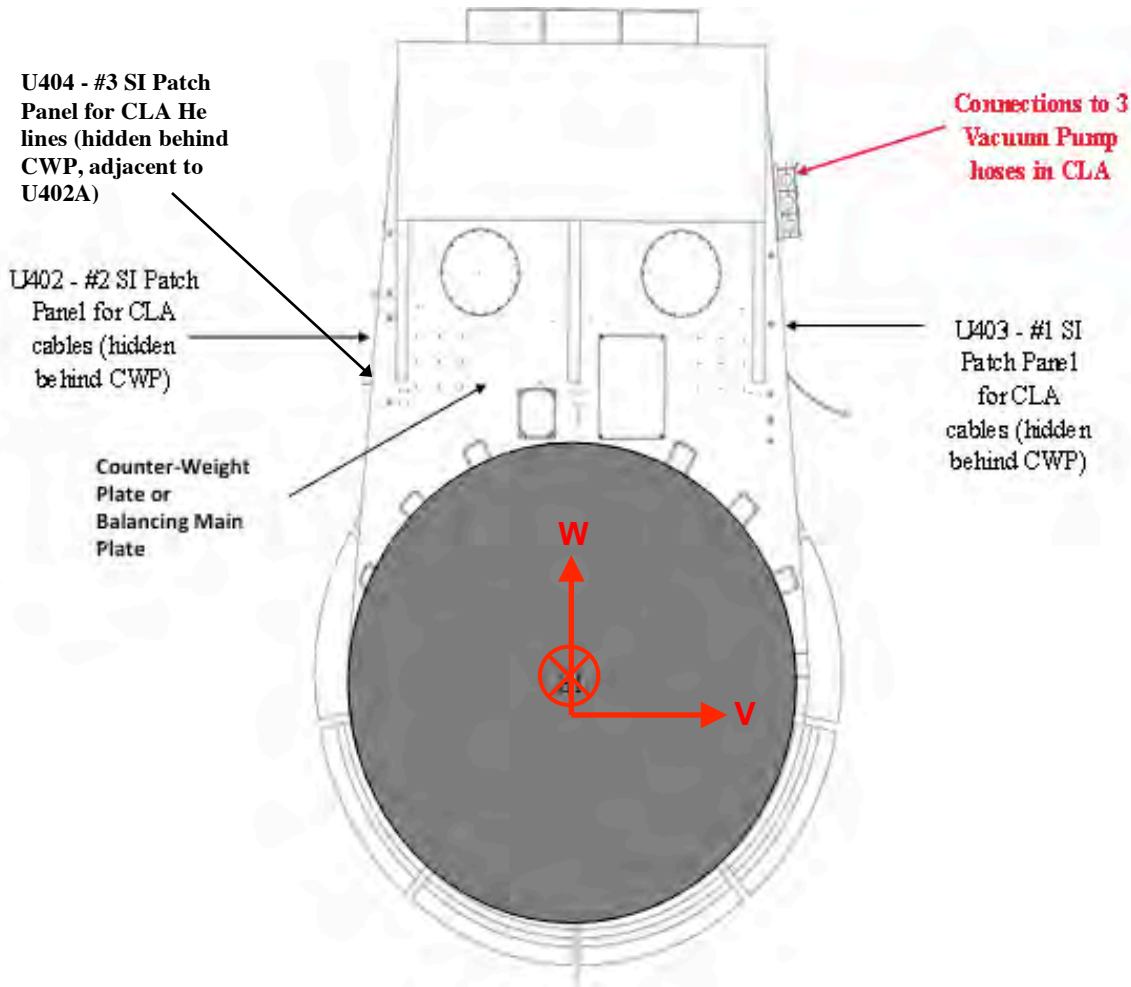

Figure 4.1-1. Front-view of SI mounting location on the TA

Ref: SOF-DWG-MG-4300.0.00 R05 "Balancing Subassembly"
Ref: Figure 4-1 ENLARGED – Appendix "SOF-DA-ICD-SE03-037 (TA_SI_02)

In this figure, ⊗ represents the geometric center of the TA Instrument Mounting Flange (IMF), which is coincident with the IR beam center.

Figure 4.1-2 presents a photograph showing the location of the Cryocooler-to-SI compressed He QD interface U404 Patch Panel installation (in-work).

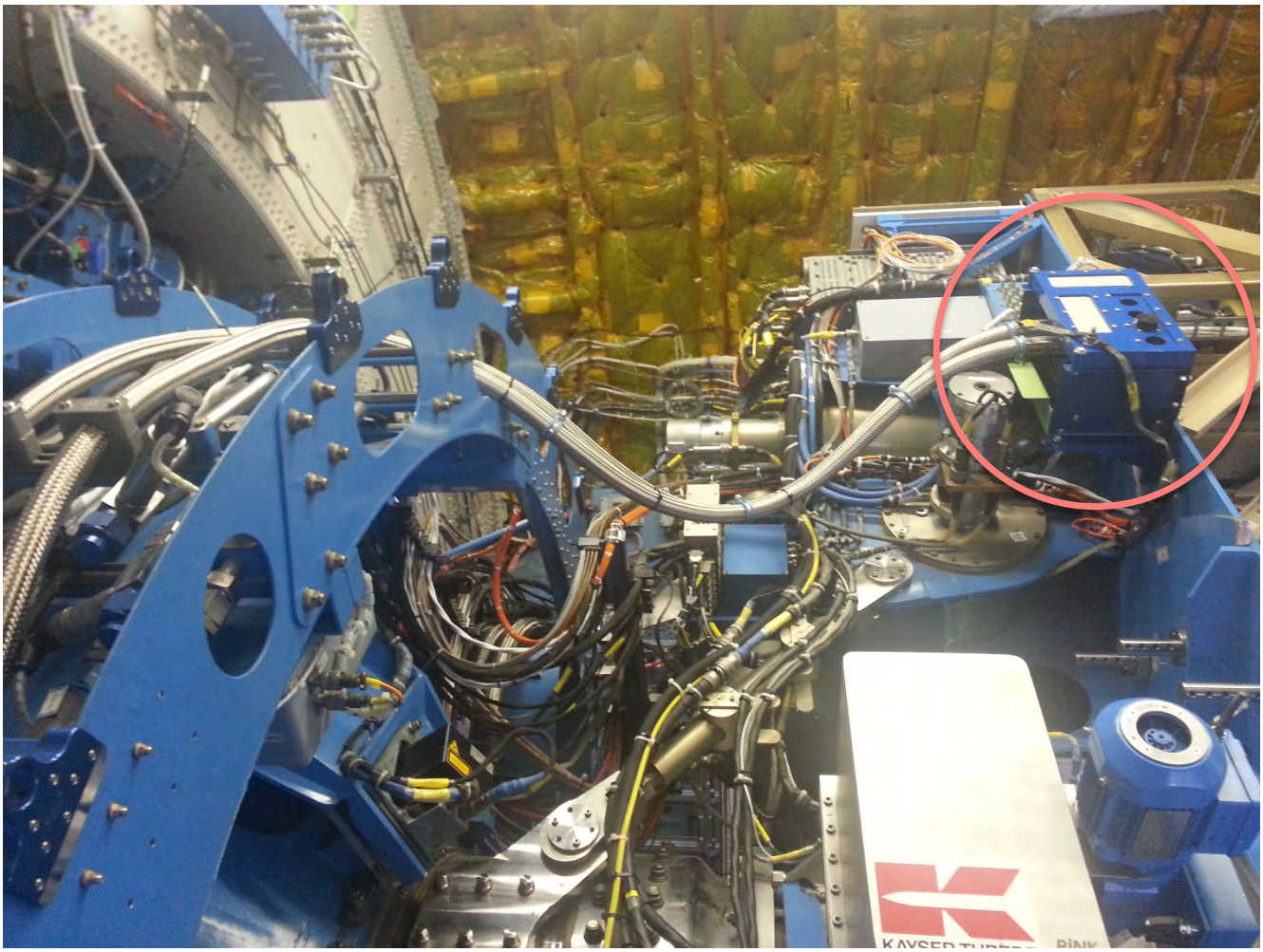

Figure 4.1-2. Photograph showing the location of the U404 compressed He QD patch panel

Figure 4.1-3 positions the center of the QD pattern on the U404 compressed He patch panel in the TA coordinate system. The geometric center of this pattern, marked with a ⊗ is located at the U,V,W coordinates presented in Table 4.1-1, below.

The U,V,W coordinates of the U404 He patch panel I/F (the center of the 2 pairs of QDs, defined here in the TA coordinate system) are:

Table 4.1-1: U,V,W coordinates of the geometric center of the U404 He QD Patch Panel

	Center of compressed He QD pattern on U404 patch panel		Center of IMF SI I/F (IR Beam Center) [Ref.]	
U	85.19 inches	2163.8 mm	89.96 inches	2285.0 mm
V	-29.22 inches	-742.2 mm	0.00 inches	0.0 mm
W	42.30 inches	1074.3 mm	3.31 inches	84.0 mm

The 4 QDs, arranged as two Supply / Return pairs, have centerlines evenly spaced at 3.00 inches (76.2 mm).

The SOFIA Observatory Systems and Systems Engineering and Integration (SE&I) groups have a 3D solid model of this Cryocooler-to-SI compressed He patch panel interface, and will make this available to SI developers in standard exchange formats such as STEP (.stp) and IGES to facilitate specification and detailed designs of the SI flex line lengths, routing and restraints.

Also shown in Figure 4.1-3 are the U402 Patch Panel with a variety of power and grounding interfaces for use by SIs, as well as the U402A Patch Panel, presently populated only with the recently added J132 power interface.

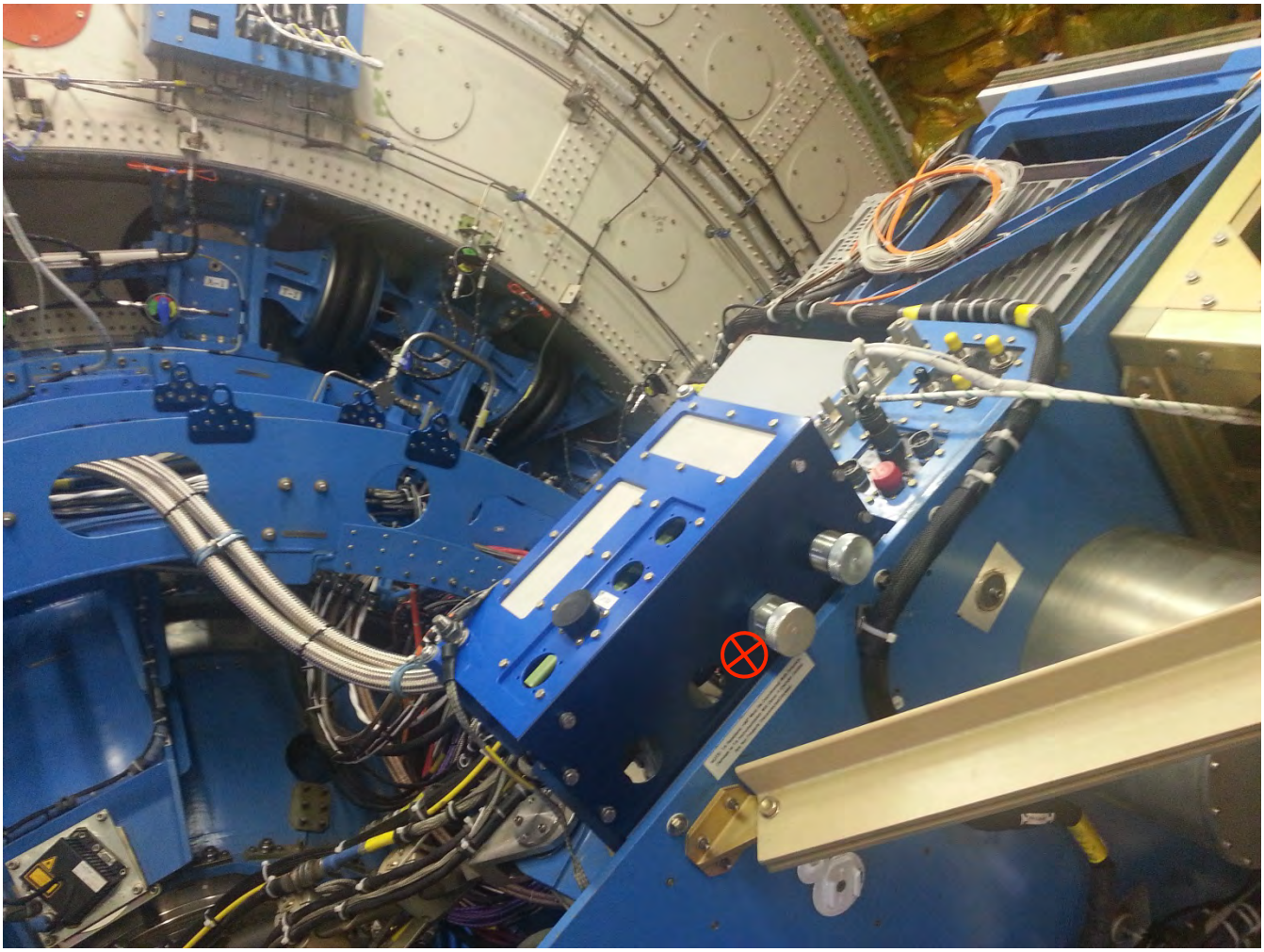

Figure 4.1-3. Photograph depicting geometric center ⊗ of He QD pattern on U404 He patch panel

The QDs used at the Cryocooler-to-SI compressed He interface are ¾ inch size Eaton / Aeroquip 5400 Series Low Air Inclusion Refrigerant QDs. The bulkhead-mounted patch panel QDs are male.

Figure 4.1-4. provides a product line summary of these Aeroquip 5400 Series QD fittings; please refer to Appendix B, Figure B-1 for further details.

Note that the Cryocooler-to-SI compressed He interface couplings (and many other QD fluid interfaces within the Cryocooler system) are ¾ inch (–12) size couplings, though the Commercial Off The Shelf (COTS) Cryocooler compressors, adsorber cartridges, and cold heads have largely standardized on the use of ½ inch (–8) size couplings.

Figure 4.1-4. Summary description of Aeroquip 5400 Series QD interface couplings

SI developers are responsible for providing, routing and restraining the flex lines between the He QD interface defined herein and the cold head servicing their cryostat.

SI-provided flex lines shall be terminated with ¾ inch (-12 size) 5400 series female QD halves with Buna-N elastomeric seals (note that -146 Buna-N is not the standard Neoprene elastomer seal material for this QD series). Other common designations for Buna-N are Nitrile Butadiene Rubber (NBR), Nitril-Kautschuk Perbunan, Nitril-Butadien-Kautschuk, and other variants. The exact Eaton / Aeroquip QD P/N will be dependent on the style and size of the end fitting and hose adapters selected by the SI developer for the Supply and Return connections to their cold head.

Dust Caps and Dust Plugs should be provided and used at all times when these QD interfaces are unmated, to protect the QD sealing surfaces.

The Cryocooler System carries a Pressure Vessel & Pressurized Systems (PVS) certification for a Maximum Operating Pressure (MOP) of 400 psi (27.6 bar). To assure integrated system compliance with DCP-S-065, all SI-provided flex lines must be qualified by the manufacturer / vendor to 4 x MOP = 1600 psi (110.3 bar), and with the guidance and concurrence of SOFIA S&MA and AFRC Pressure Systems Manager, must each be individually "proof" tested to an acceptance level of 2 x MOP = 800 psi (55.2 bar).

In order to assure the integrity of the integrated He loop, it is recommended that the SI developer leak check their lines, fittings, cold head and any associated Pressure Relief Devices (PRDs) at 1 x MOP.

For compliance with NPD 8710.5, *Policy for Pressure Vessels and Pressurized Systems (PVS)*, NASA-STD-8719.17 and DCP-S-065, all pressurized flexible lines shall be properly restrained at both ends and at intermediate intervals as necessary to mitigate hazards from whipping hoses.

SI developers are further advised that pressurized flexible hoses must be retested at 1 x MOP no less frequently than every 5 years, and labeled to reflect these recertification intervals.

To avoid misconnections, Supply and Return lines should be clearly marked at both ends.

For reference, the SOFIA Cryocooler System uses an annularly corrugated stainless steel flexible line with a stainless steel wire overbraid with a 1 inch ID, manufactured by Witzenmann GmbH, P/N HYDRA RS321. A data sheet for this flexible line is provided in Appendix B as Figures B-2.1 and B-2.2.

When the SI cryostat and cold head are integrated with the SOFIA Cryocooler System, the SI flex lines are protected by various Cryocooler System Pressure Relief Valves (PRVs) and Rupture Disks. However, when the SI is disconnected from the Cryocooler System (i.e., at the end of a flight series), the SI System Safety Assessment (SSA), Qualification and Acceptance pressure test plans, and Airworthiness Data Package must show that the SI safely accommodates or vents the pressure that could build up in this now isolated volume.

The SOFIA Cryocooler System does provide the capability of pumping out and backfilling the entire He loop via a ¼ inch Aeroquip 5400 series QD on the Helium compressor. SI developers may also develop their own GSE pump-out and flush or backfill manifolds to facilitate and expedite He loop servicing, if so desired.

4.2. Cryocooler Control System & Electrical / Electronic Interfaces

The Cryocooler System includes a control system which provides both local and remote user interface command and monitoring functionality. The control system monitors a number of system performance and housekeeping parameters, performs system safing functions, and annunciates warnings and alarms.

Figure 4.2-1 is a CAD graphic depiction of the Cryocooler System compressor installation, showing the notional Control System enclosure mounted to the protective guard rail assembly.

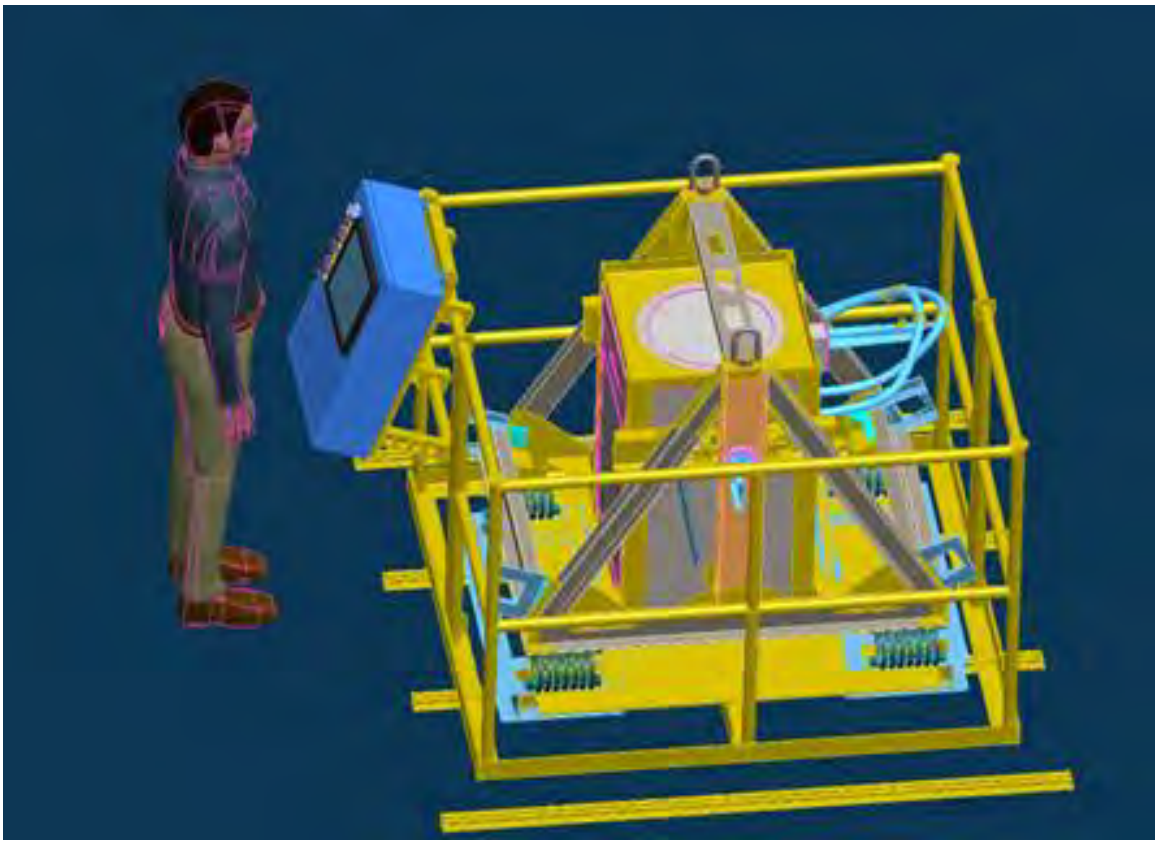

Figure 4.2-1 Cryocooler compressor installation showing notional Control System enclosure mounted to guard rail assembly

The control system will have the following interfaces for operation:

- Compressor (with added instrumentation)
  - Compressor intrinsic I/O
  - Added instrumentation and sensors for safety interlocks and display data
    - Accel (2-axis)
    - Tilt (2-axis)
    - Temperature (4 RTDs)
    - Pressure (2 transducers on Adsorber Pallet mounted in overhead liner)
- 200 VAC, 60 Hz, 3-Phase Input Power
  - From Unitron Frequency Converters (FCs) within scope of MCCS PDS
  - 28 VDC Control Power to be generated internally via DC power supply
- 200 VAC, 60 Hz, 3-Phase Output Power
  - To compressor
- Control Panel
  - Operator interface when in LOCAL control mode
  - Temperature and pressure displays on the control panel will remain active even when system is in REMOTE (SI) control mode
- Science Instrument (SI) Data Acquisition System (DAS)

  - Sending housekeeping analog signals to the SI for local and remote monitoring and inclusion in SI housekeeping data
  - Sending operational status to SI
  - Receiving command discrete signals from SI (when REMOTE CONTROL is ENABLED)
- Adsorber Pallet
  - Supply and Return Pressure transducers for safety interlocks and status monitoring / housekeeping data

Figure 4.2-2 shows the control system interface block diagram and its various interfaces to the compressor, the SI, and the MCCS PDS. The portion of Figure 4.2-2 control block diagram that shows the SI interface is enclosed in a red dashed line.

Note that this section includes certain subsections and figures which describe and depict interfaces that are outside the scope of this ICD, but are presented to provide context for the nature of the Cryocooler Control System and the Cryocooler System to SI interfaces that are the subject of this document.

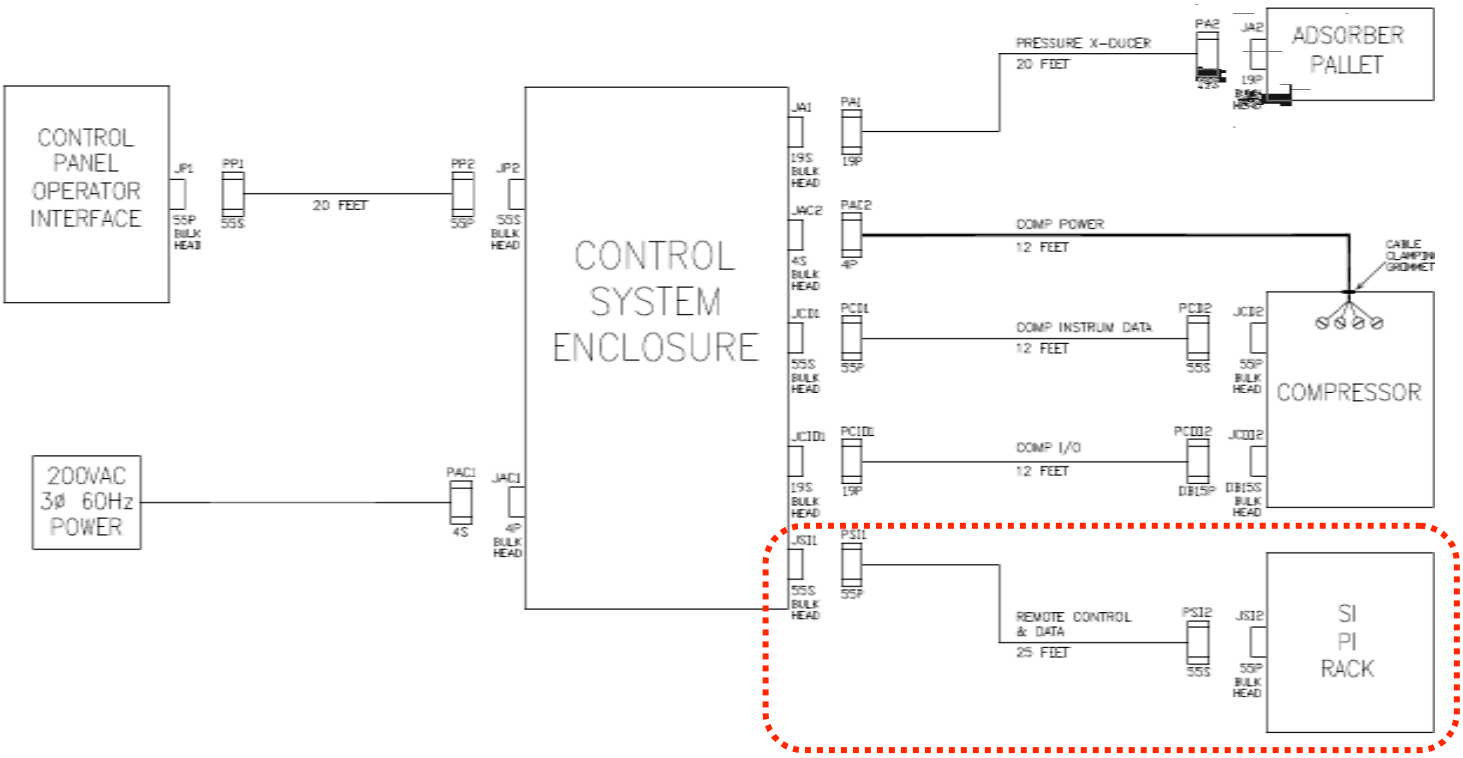

Figure 4.2-2 Cryocooler control system block diagram showing SI interface

4.2.1. Control System-to-Compressor Interface

The control system interfaces to the compressor through a DB15 Connector. Table 4.2.1-1 shows the compressor DB15 connector pin configuration.

Table 4.2.1-1: Compressor DB15 Connector Configuration

PIN #s	ITEM	FAULT CONDITION
1, 2	Pressure Alarm Signal	> 10^6 ohm
3, 4	Temp. Alarm Signal	> 10^6 ohm
9, 10	Room Temp Alarm Signal	> 10^6 ohm
6, 7	Drive Indication	0 V
7, 13	Control Voltage	
12, 14	Remote Reset	
8, 15	Remote Drive	

The compressor main power switch (DS) will be left ON and the remote drive switch (S3) will be left in EXT mode. There are three control signals for interfacing with the compressor, which are only active if the compressor has AC Power:

- Drive start
  - A jumper across two pins on the DB15 STARTs the compressor
  - Removal of the jumper STOPs the compressor
- Drive Indication
  - A 24VDC output from the compressor when the unit is running
  - A 0VDC output from the compressor when the unit is not running
- Drive Reset
  - A momentary jumper across two pins on the DB15 resets the compressor
  - Reset is needed if there has been a compressor alarm

There are three alarms built into the compressor:

- Pressure
  - An alarm which activates when either of two pressure switches activate and the compressor will shutdown
    - PSH for high pressure alarm set at 2.55 MPa (370 psi)
    - PSL for low pressure alarm set at 0.15 MPa (23 psi)
- Temperature
  - An Alarm which activates when any of two thermostats activates and the compressor will shutdown
    - TS1 set at 110 deg C (230 deg F) at the compressor
    - TS2 set at 60 deg C (140 deg F) He-gas cooler outlet
  - An Alarm which activates when the ambient temperature inside the compressor enclosure reaches 55 deg C (131 deg F)

- There are additional electrical safety devices intrinsic to the Compressor that do not interface with the Control System, but will shut-down the Compressor if activated:
  - Main Power Switch (DS) overcurrent set at 29 Amps
  - Phase Failure Relay (RPR) which acts as a power monitor and checks the input power for correct connection and phase
  - Fuses F1, F2, and F3 which protect against short-circuit or overload in the internal DC Power or RPR

- Fuses F4, F5, and F6 which protect against short-circuit or overload in the Cooling Fan assembly
- Fuses F7, F8, and F9 which protect the Compressor, against short-circuit or overload, and the Cold Head assembly
- An access hatch is being developed so that the Compressor Fuses F1 through F9 may be accessed without removing the compressor from its gimbal mount or removing compressor housing side panels, however it is not anticipated that these fuses will be accessed or replaced in flight, so a blown fuse during a mission would likely result in an end to cryocooler operations pending ground servicing

4.2.2. Control System Power Start/Stop Logic

Both the incoming AC Power and internally generated DC Power will have separate, dedicated Circuit Breakers (CBs) within the Control System enclosure. The Control System design is based on a Programmable Logic Controller (PLC). DC Power will be used for control/logic Power and is turned on with a Control Panel toggle switch called CONTROL POWER. If this toggle switch is in the OFF position, the control system is inactive and the compressor cannot run.

In addition to the CBs and toggle switches for the AC Power and DC Power, the Control System enclosure also provides several additional toggle switches and indicator lights, as well as a touch screen Human Machine Interface (HMI) display, which provides a Graphical User Interface (GUI), as well as 10 programmable "soft" buttons, which will support the Control and Monitoring functionality described in the following subsections.

AC power will run through a contactor that feeds the compressor but while it turns ON the internally generated 24VDC compressor logic power and I/O is functional, this does not start the compressor. The compressor contactor will be controlled via a momentary button labeled Compressor Power ON. If the momentary button Compressor Power OFF is pushed, the compressor will SHUTDOWN. When the AC Power is turned OFF, all compressor I/O is non-functional.

Under normal operation the AC Power turned ON and left ON, and not used to control the START or STOP of the compressor. Start/Stop of the compressor is through a momentary pushbutton. When the compressor is SHUTDOWN with a STOP command or an Alarm SHUTDOWN, all compressor I/O will remain functional. Start/Stop logic interfaces directly with the compressor DB15 connector through relay contacts in the control system.

If the Compressor Power OFF momentary pushbutton is pressed the compressor will SHUTDOWN and the stop button light will illuminate (red), and the START button light will extinguish. If the Compressor Power ON momentary pushbutton is pressed the compressor will be given a relay contact "jumper" for Comp Drive Start and the STOP button light will extinguish.

4.2.3. Control System Signal Conditioning, Warnings & Alarms

Signal conditioners will be utilized for ten GFE sensors installed on the compressor. The sensors are:

- Lateral Accelerometer
- Vertical Accelerometer
- Tilt Sensor Pitch
- Tilt Sensor Roll
- Compressor Capsule Housing Temperature
- Compressor Output Temperature
- Heat Exchanger Outlet Temperature
- Ambient Air Temperature
- Supply Pressure
- Return Pressure

These sensors will support the following functionality:

- Analog output for local display and for the SI, and will be calibrated end-to-end

- Level detectors for alarm output
    - Illuminate yellow warning annunciators
    - Illuminate alarm signal
    - Interlocks for compressor shutdown

- Six red Alarm annunciators
    - Power Fault (due to loss of AC power)
    - Compressor Pressure
    - Compressor Temperature
    - Acceleration (Lateral or Vertical)
        - Alarm if the compressor sees more than 1.5 Gs
    - Tilt (Pitch or Roll)
        - Alarm if the compressor tilts more than +/- 5 degrees in either the Pitch or Roll axis (relative to the effective gravity vector)
    - Motor (Compressor Capsule) Over Temp
        - Alarm if the compressor capsule housing temperature reaches a designated preset limit

- Latched red Alarm annunciators
    - Results in a Compressor SHUTDOWN
    - Can only be cleared by pressing the momentary ALARM RESET button AND the alarm condition has been cleared
        - Each alarm has its own latching circuit
        - If multiple alarm conditions exist, resetting one alarm will not reset other alarms if the associated alarm condition is still active
        - A successful alarm reset does not result in a compressor re-start, a normal START procedure must be followed
    - Alarm will also result in an Audible Alarm Buzzer going ON
        - Buzzer will have a momentary Acknowledge button to silence the buzzer
        - Any new or recurring alarm will cause Buzzer to go ON again

- ALARM RESET also acts as Alarm Acknowledge

The initially recommended preset limits for the six (6) additional GFE temperature and pressure sensors are presented in Table 4.2.3-1 (note that these limits are notional and easily reconfigurable via the PLC):

Parameter Limits	Warning	Alarm
Motor Capsule temperature (˚C)	87	92
Compressor Outlet (˚C)	105	110
Heat Exchanger Outlet (˚C)	54	59
Internal Ambient temp (˚C)	52	55
Supply High Pressure (psi)	>365	>369
Return Low Pressure (psi)	<22	<16

Table 4.2.3-1: Compressor Temperature and Pressure Sensor Warning & Alarm limits (notional)

If override is active when that particular alarm condition happens, compressor will not SHUTDOWN but the red alarm annunciator will illuminate and latch ON. A red alarm light cannot be extinguished unless alarm reset is pressed and the alarm condition has gone away, even when in override.

The temperature displays will include compressor capsule housing, compressor outlet, heat exchange outlet, and ambient air temperatures. The pressure displays will allow viewing of supply and return pressures.

4.2.4. Cryocooler System to SI Electrical Power Interfaces

Generally speaking, SI cryostat cold heads require a source of power, in addition to the pressure differential provided by the compressor, in order to operate. In a typical industrial cryocooler configuration, the cold head power is provided by the compressor with which it is paired.
Some SIs (e.g., upGREAT) will use external, 3rd party power supplies, with variable frequency drive units, to power the rotary valves of their Pulse Tube cold heads.

If the SI places the cold head power supplies in a PI Rack (as w/ upGREAT) or is using the compressor's cold head power supply, it is necessary to route this power through the Cable Load Alleviator (CLA).

For adequately low power applications (e.g., 230 VAC 3-phase @ < 300 mA / phase), it is possible for the SI to use existing patch panel interfaces and cables routed under the SOFIA main deck floor panels and through the CLA. For example, U400 / U403 J75 through J79 each have ten #20 AWG Twisted Shielded Pairs (TSPs) which can be allocated for this low-power application.

Future enhancements of the SOFIA Cryocooler System may include two (2) additional cold head power interfaces, with twisted shielded triple #14 AWG conductor cable, to support higher power 3-phase power transmission.

No other Cryocooler System-to-SI electrical power interfaces are anticipated or supported.

If an SI chooses to place their cold head power supply on the TA side of the CLA cable interface (e.g., in the CWR), it is likely that a discrete signaling interface will be needed to allow the powered cold head operation to be synchronized with the compressor operation.

The Cryocooler System does provide such an interface to the SI PI Rack (ref. Section 4.2.5 and Table 4.2.5-1, below), however any routing or extension of this signal from the PI Rack to the SI assembly or CWR through the CLA (e.g., using U400 / U403 J75 ~ J79) would be an intra-SI interface, and therefore outside the scope of this document.

4.2.5. Cryocooler System to SI Electronic Signal Interfaces

The Cryocooler System Phase 1 development supports the operation of a single He compressor driving a single Pulse Tube cold head. The Cryocooler Compressor Control System enclosure provides direct signaling interface to an SI PI Rack via an "umbilical" signal cable provided by the Cryocooler System. This cable will be designed and routed such that it can reach the aft bay for any rack location in a PI Rack that is in either the Primary or Aux PI Rack positions, as defined in SE03-2015, *PI Equipment to PI Rack To Aircraft Interface ICD* (SI_AS_01).

To interface with this Cryocooler System to SI signal interface, the SI shall provide a D38999/20ZH55PN bulkhead receptacle (pin contacts) at the aft facing bay of an SI PI Rack, that is wired to interface with the Cryocooler System signal interface umbilical cable contact assignments, as defined in Table 4.2.5-1.

For further details of the Cryocooler System-to-SI signal interfaces, please refer to Table 4.2.5-1 below, as well as subsections 4.2.5.1 and 4.2.5.2.

These signaling interfaces include nine (9) discrete signals, of which four (4) represent contact closure command inputs from the SI PI Rack to the Cryocooler control system, and five (5) represent Cryocooler System 0 VDC Sink / 24 VDC Source status outputs to the SI PI Rack.

The remaining signal interfaces are ten (10) analog signal outputs from the Cryocooler System to the SI PI Rack. These have either 0 to 10 VDC or -10 to 10 VDC analog output ranges that are calibrated and proportional to the Engineering Units of the associated parameter, as defined in Table 4.2.5-1, below.

The SI receives status signal in the form of 0 VDC Sink (for OFF or Low) and 24 VDC Source (for ON or High) contacts. The control status signals are:

- Compressor Run Status
  - Positive indication if the compressor is running or not
- Power Fault
- Alarm
  - Indicates if there is any Alarm condition
- Warning
  - Indicates if there is any Warning condition
- Remote Mode Enabled
  - Indicates if the control system is in Remote (vs. Local) mode

The control system will have a REMOTE CONTROL toggle switch that will enable the system to be commanded from the SI. The SI will be able to remotely run the control system with the following commands in the form of Open (OFF) and Closed (ON) momentary contacts:

- Compressor Drive Start
- Compressor Drive Stop
- Compressor Drive Reset
- Alarm Reset

These commands will operate the control system just as is they were commanded from the local operator interface panel (control panel). It is important to note that these command inputs must be in the form of momentary contacts. All of these contacts are defined as Normally OPEN (NO), with the exception of the Comp Drive Stop command contacts, which are defined as Normally CLOSED (NC).

When the REMOTE CONTROL switch is in the ENABLE position, no commands, including STOP may be issued from the local control panel. The local control panel can still monitor all parameters, but in order to issue a command from the control panel, the operator would have to flip down the guard on the REMOTE CONTROL switch and toggle the switch to the DISABLE position. It should also be noted that changing mode from Local to Remote or vice versa is seamless and will not cause the compressor to turn off if it is running.

The Control System also provides a REMOTE MODE ENABLED status discrete signal to the SI, so that the SI operators will be able to tell whether the Cryocooler System is in local (Cryocooler System control panel) or remote (SI) control mode.

A graphic showing a preliminary layout of the CBs, switches, buttons, indicators and the touchscreen HMI display on the Cryocooler System Compressor Operator Interface Panel (control panel) is presented below as Figure 4.2.5-1.

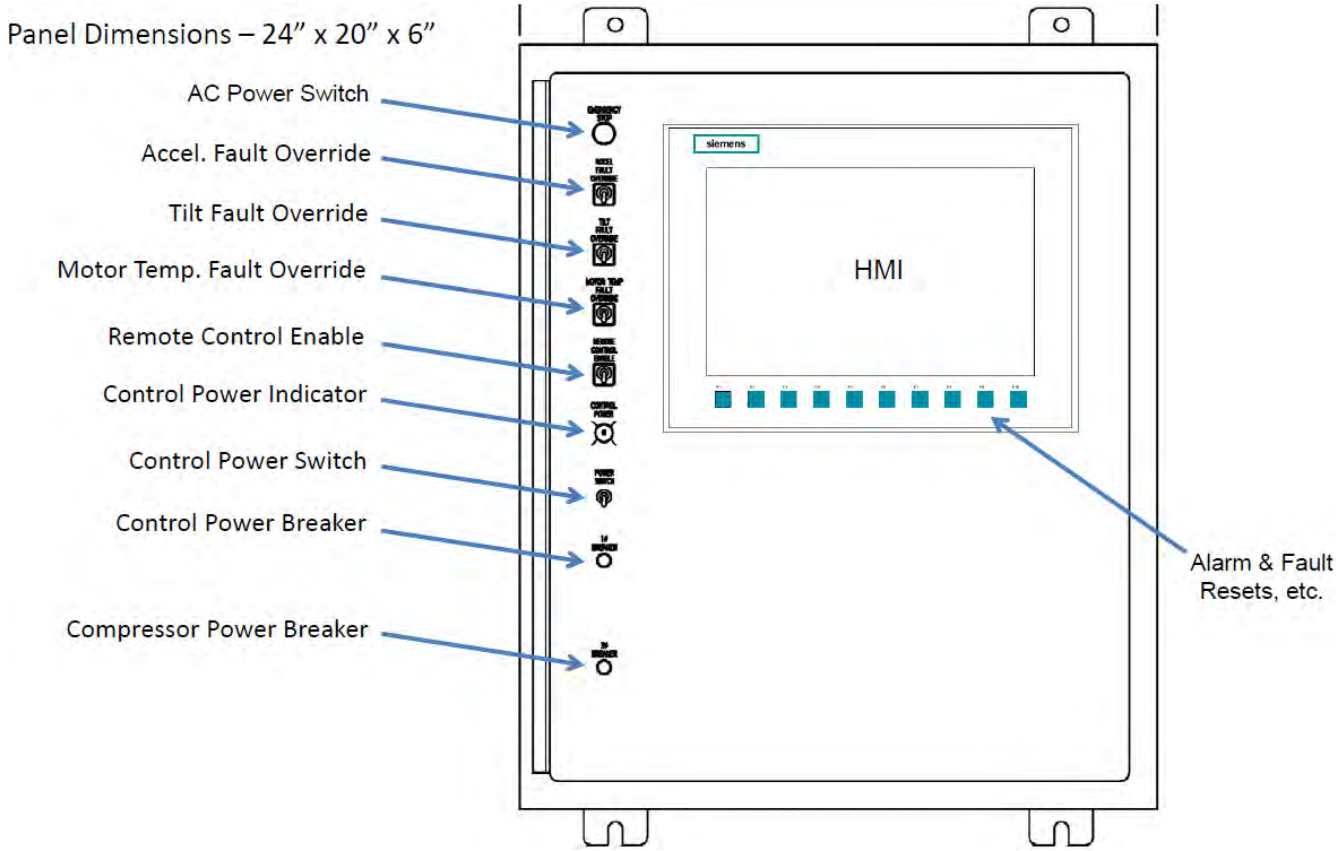

Figure 4.2.5-1 Preliminary layout of Compressor Operator Interface Panel

Please refer to drawing SE02-3661, *SOFIA Cryocooler Control System Cables and System Wiring, Sheet 5 of 6: Control System Enclosure to SI PI Rack Cable*, for cable design and fabrication details. An excerpt of this drawing is presented below as Figure 4.2.5-2.

There will be 38 #22 AWG wires and 4 shields between the SI PI Rack and the Cryocooler Control System. They will use 42 of 55 pins in D38999/2*ZH55*N connectors, with 2 NC pins as SPARES and 11 pins not used.

The cable will make use of Twisted Pairs (TPs) for each Signal / Signal Return or +SIG / -SIG pair.

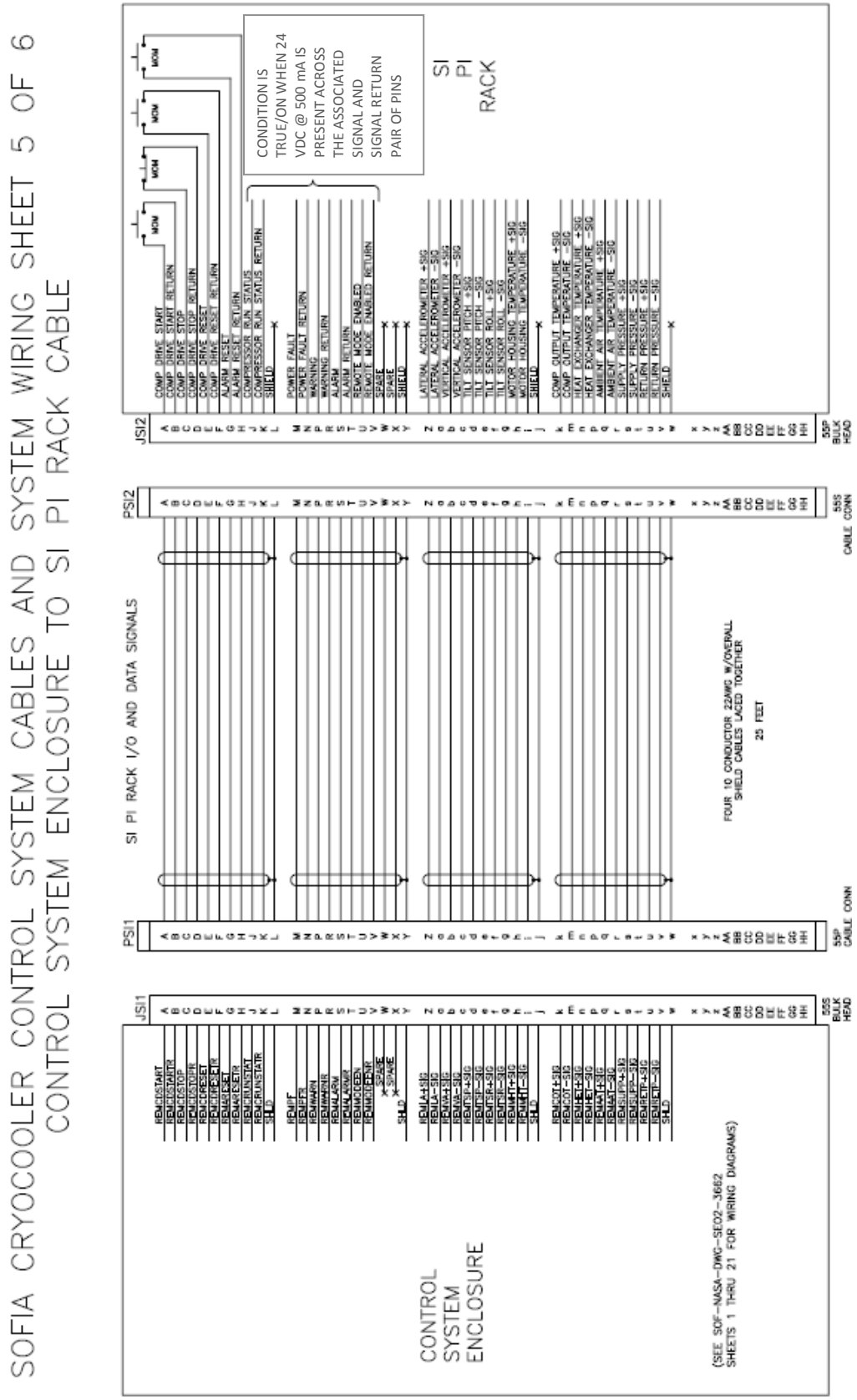

Figure 4.2.5-2 Cryocooler Control System Cables & System Wiring (ref. NASA-SOF-DWG-SE02-3661)

Shields will be tied to an Isolated Copper Block in the Control System Enclosure. The Isolated Copper Block will be tied to the Enclosure Chassis using a #10 AWG wire, and the Enclosure Chassis will then be tied to Aircraft Frame using an #8 AWG wire. Shields will be floating on the SI PI Rack end of the Cryocooler System signal interface umbilical cable contact.

The SOFIA Cryocooler System Phase 1 development does not support any interface to the MCCS DAS or Instrumentation subsystems for commanding, monitoring or data logging and availability / access to Cryocooler System housekeeping parameters functions. Future enhancements of the Cryocooler System may implement such interfaces, however these would be within the scope of SE03-2060 (CRYO_AS_01) instead of this ICD.

While an SIs use of these signal interfaces may be somewhat SI-specific, given the Cryocooler System and "24 / 7" powered Concept of Operations (ConOps), use of these command, status and monitoring signals by the integrated SI will allow both local and remote users the maximum situational awareness and insight into system performance with a simple, but robust and rich user interface feature set.

To the extent that this is supported by the SI data acquisition, networking and infosec considerations, the Cryocooler status and data outputs may be monitored, recorded and archived by the SI, and the remote control and monitoring functions may be extended over computer networks to users at offsite locations, potentially including offices at AFRC Bldg. 703, nearby hotel rooms, or even the SI / PI team's home institutions.

The infosec configurations and protocols necessary to support such remote connectivity are not within the scope of this ICD, however the user is advised that they should initiate discussions with USRA Mission Operations (MOPS) IT support staff re: such requirements as early as possible, as coordination, approval and implementation of the necessary firewall configurations with AFRC can take as long as 2+ weeks.

SIs that use the SOFIA Cryocooler System are strongly encouraged to include some or all of these Cryocooler System parameters in the Housekeeping (HK) data that is recorded, archived and provided to the MCCS, as controlled and defined within the SI to MCCS software / functional ICD.

Table 4.2.5-1 Cryocooler System to SI Discrete and Analog Signal Definition and I/F Connector Pinout

Comp Drive Start Return	SI PI Rack	Contact Closure	DRIVE START of the Compressor (Normally OPEN)	N/A	24VDC @ 500 mA, minimum
Comp Drive Stop	Command Discrete Input from SI PI Rack	Contact Closure	Momentary contact closure from SI PI Rack for REMOTE DRIVE STOP of the Compressor (Normally CLOSED)		SI PI Rack Contact must be rated for 24VDC @ 500 mA, minimum
Comp Drive Stop Return					
Comp Drive Reset	Command Discrete Input from SI PI Rack	Contact Closure	Momentary contact closure from SI PI Rack for REMOTE DRIVE RESET of the Compressor (Normally OPEN)		SI PI Rack Contact must be rated for 24VDC @ 500 mA, minimum
Comp Drive Reset Return					
Alarm Reset	Command Discrete Input from SI PI Rack	Contact Closure	Momentary contact closure from SI PI Rack for REMOTE ALARM RESET of the Compressor (Normally OPEN)		SI PI Rack Contact must be rated for 24VDC @ 500 mA, minimum
Alarm Reset Return					
Compressor Run Status	Status Discrete Output to SI PI Rack	0 VDC Sink / 24 VDC Source	Discrete signal from Control System notifying SI PI Rack that Compressor is RUNNING		24 VDC @ 500 mA when condition is TRUE
Compressor Run Status Return					
Overall Shield for PINS A through K	N/A	Shield	Overall shield for 5 Twisted Pair discrete signals		N/A
Power Fault	Status Discrete Output to SI PI Rack	0 VDC Sink / 24 VDC Source	Discrete signal from Control System notifying SI PI Rack that there is a POWER FAULT		24 VDC @ 500 mA when condition is TRUE
Power Fault Return					
Warning	Status Discrete Output to SI PI Rack	0 VDC Sink / 24 VDC Source	Discrete signal from Control System notifying SI PI Rack that there is a WARNING Light Illuminated		24 VDC @ 500 mA when condition is TRUE
Warning Return					
Alarm	Status Discrete Output to SI PI Rack	0 VDC Sink / 24 VDC Source	Discrete signal from Control System notifying SI PI Rack that there is a ALARM Light Illuminated		24 VDC @ 500 mA when condition is TRUE
Alarm Return					
Remote Mode Enabled	Status Discrete Output to SI PI Rack	0 VDC Sink / 24 VDC Source	Discrete signal from Control System notifying SI PI Rack that REMOTE MODE is ENABLED		24 VDC @ 500 mA when condition is TRUE
Remote Mode Enabled Return					
SPARE	SPARE	SPARE	SPARE	SPARE	SPARE
SPARE					
Overall Shield for PINS M through X	N/A	Shield	Overall shield for 5 Twisted Pair discrete signals	N/A	N/A
Lateral Accelerometer +SIG	Data Analog Output to SI PI Rack	-10 VDC to 10 VDC	A calibrated -10 VDC to 10 VDC Output Signal proportional to the Parameter EU	-2.5 g to +2.5 g	SI PI Rack Channel Input Impedance must be 1000 ohms or greater
Lateral Accelerometer -SIG		RET			
Vertical Accelerometer +SIG	Data Analog Output to SI PI Rack	-10 VDC to 10 VDC	A calibrated -10 VDC to 10 VDC Output Signal proportional to the Parameter EU	-2.5 g to +2.5 g	SI PI Rack Channel Input Impedance must be 1000 ohms or greater
Vertical Accelerometer -SIG		RET			
Tilt Sensor Pitch +SIG	Data Analog Output to SI PI Rack	-10 VDC to 10 VDC	A calibrated -10 VDC to 10 VDC Output Signal proportional to the Parameter EU	-30 deg to +30 deg	SI PI Rack Channel Input Impedance must be 1000 ohms or greater
Tilt Sensor Pitch -SIG		RET			
Tilt Sensor Roll +SIG	Data Analog Output to SI PI Rack	-10 VDC to 10 VDC	A calibrated -10 VDC to 10 VDC Output Signal proportional to the Parameter EU	-30 deg to +30 deg	SI PI Rack Channel Input Impedance must be 1000 ohms or greater
Tilt Sensor Roll -SIG		RET			
Motor Housing Temperature +SIG	Data Analog Output to SI PI Rack	0 to 10 VDC	A calibrated 0 to 10 VDC Output Signal proportional to the Parameter EU	0.0 °C to 120.2 °C (32.0 °F to 248.4 °F)	SI PI Rack Channel Input Impedance must be 1000 ohms or greater
Motor Housing Temperature -SIG		RET			
Overall Shield for PINS Z through i	N/A	Shield	Overall shield for 5 Twisted Pair discrete signals	N/A	N/A
Comp Output Temperature +SIG	Data Analog Output to SI PI Rack	0 to 10 VDC	A calibrated 0 to 10 VDC Output Signal proportional to the Parameter EU	0.0 °C to 120.2 °C (32.0 °F to 248.4 °F)	SI PI Rack Channel Input Impedance must be 1000 ohms or greater
Comp Output Temperature -SIG		RET			
Heat Exchanger Temperature +SIG	Data Analog Output to SI PI Rack	0 to 10 VDC	A calibrated 0 to 10 VDC Output Signal proportional to the Parameter EU	0.0 °C to 120.2 °C (32.0 °F to 248.4 °F)	SI PI Rack Channel Input Impedance must be 1000 ohms or greater
Heat Exchanger Temperature -SIG		RET			
Ambient Air Temperature +SIG	Data Analog Output to SI PI Rack	0 to 10 VDC	A calibrated 0 to 10 VDC Output Signal proportional to the Parameter EU	0.0 °C to 120.2 °C (32.0 °F to 248.4 °F)	SI PI Rack Channel Input Impedance must be 1000 ohms or greater
Ambient Air Temperature -SIG		RET			
Supply Pressure +SIG	Data Analog Output to SI PI Rack	0 to 10 VDC	A calibrated 0 to 10 VDC Output Signal proportional to the Parameter EU	0 psia to 500 psia (0 bar to 34.5 bar)	SI PI Rack Channel Input Impedance must be 1000 ohms or greater
Supply Pressure -SIG		RET			
Return Pressure +SIG	Data Analog Output to SI PI Rack	0 to 10 VDC	A calibrated 0 to 10 VDC Output Signal proportional to the Parameter EU	0 psia to 500 psia (0 bar to 34.5 bar)	SI PI Rack Channel Input Impedance must be 1000 ohms or greater
Return Pressure -SIG		RET			
Overall Shield for PINS k through v	N/A	Shield	Overall shield for 5 Twisted Pair discrete signals	N/A	N/A
Unused (NC)	N/A	N/A	Unused contact locations (NC)	N/A	N/A

4.2.5.1. Cryocooler System to SI Electronic Command & Status Discrete Signal Interfaces

The four (4) command inputs from the SI PI Rack to the Cryocooler System are momentary Normally OPEN (NO) contacts, with the exception of the Compressor Drive Stop (REMCDSTOP) signal, which is a Normally CLOSED (NC) contact.

These momentary contact state transitions shall be of a duration between 5 milliseconds (ms) to 1 second.

The SI interface relay or switch contacts and associated circuitry shall be adequately sized for 24 VDC @ 500 mA, minimum.

For the five (5) Cryocooler System status output discretes to the SI PI Rack, the discrete is asserted indicating that the condition is TRUE / ON when the Cryocooler System control system sources a 24 VDC @ 500 mA signal between the associated pair of pins, and the condition is FALSE / OFF when the Cryocooler System control system sinks 0 VDC across these pins.

Among these Cryocooler System status discretes is the REMOTE MODE ENABLED (REMMODEN) signal which signals to the SI whether the Cryocooler control system is in Local (control panel) or Remote (SI control) mode.

4.2.5.2. Cryocooler System to SI Electronic Status & Monitoring Analog Signal Interfaces

The Cryocooler System compressor is instrumented with a variety of temperature sensors (RTDs), multi-axis accelerometers, and tilt sensors. In addition, the Cryocooler manifold / adsorber pallet includes pressure transducers on both the Supply (high pressure) and Return (lower pressure) legs of the He loop.

These sensor inputs are conditioned by the Cryocooler control system as ten (10) analog output signals, each of which is calibrated to the range of the Engineering Units (EU) of the associated parameter.

The calibrated range in Engineering Units for each parameter corresponding to the calibrated analog output range of 0 to 10 VDC or -10 to 10 VDC is provided in the Parameter EU Range column of Table 4.2.5-1.

To ensure the integrity of the parameter calibrations, the SI A/D input impedance shall be no less than 1000 Ω.

5. SAFETY HAZARDS

Cryocooler System Preliminary Failure Modes & Effects Analysis (FMEA) document APP-DF-REP-PA06-2031 has been developed to address the hazards associated within the Cryocooler system installation and operation. In addition a guard / handrail for the Cryocooler System compressor pallet and gimbal mount will be installed to protect personnel from injury due trips/falls, pinch points, etc. To facilitate integration of the guard,

as well as SI installation and removal operations, the guard rail will be segmented. The Cryocooler Control System enclosure will be mounted to the more permanently mounted starboard section of the guard rail assembly.

6. CRYOCOOLER COMPRESSOR INSTALLATION AND SI ENVELOPE CONSIDERATIONS

The Cryocooler compressor package location is approximately from Fuselage Station (FS) 1233 to FS 1293 (including the guard rail), and centered within the fuselage, i.e., around Butt Line (BL) 0. Figures 6-1 and 6-2 show the expected location of the cryocooler compressor installation (note that the depiction of the Cryocooler control system enclosure, shown here mounted at the aft end of the compressor guard rail, is no longer current).

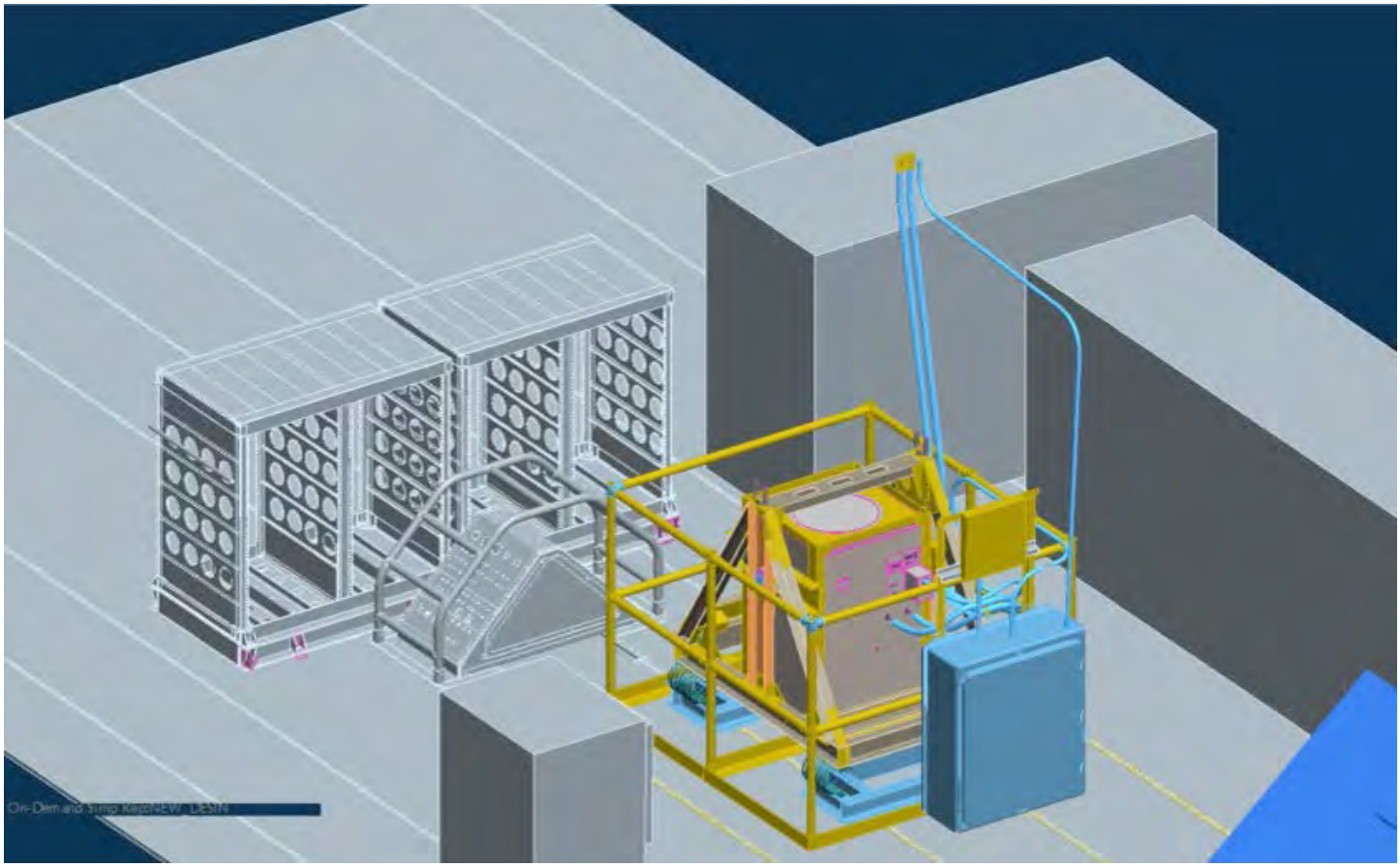

Figure 6-1: Cryocooler Compressor Package Expected Location, isometric view

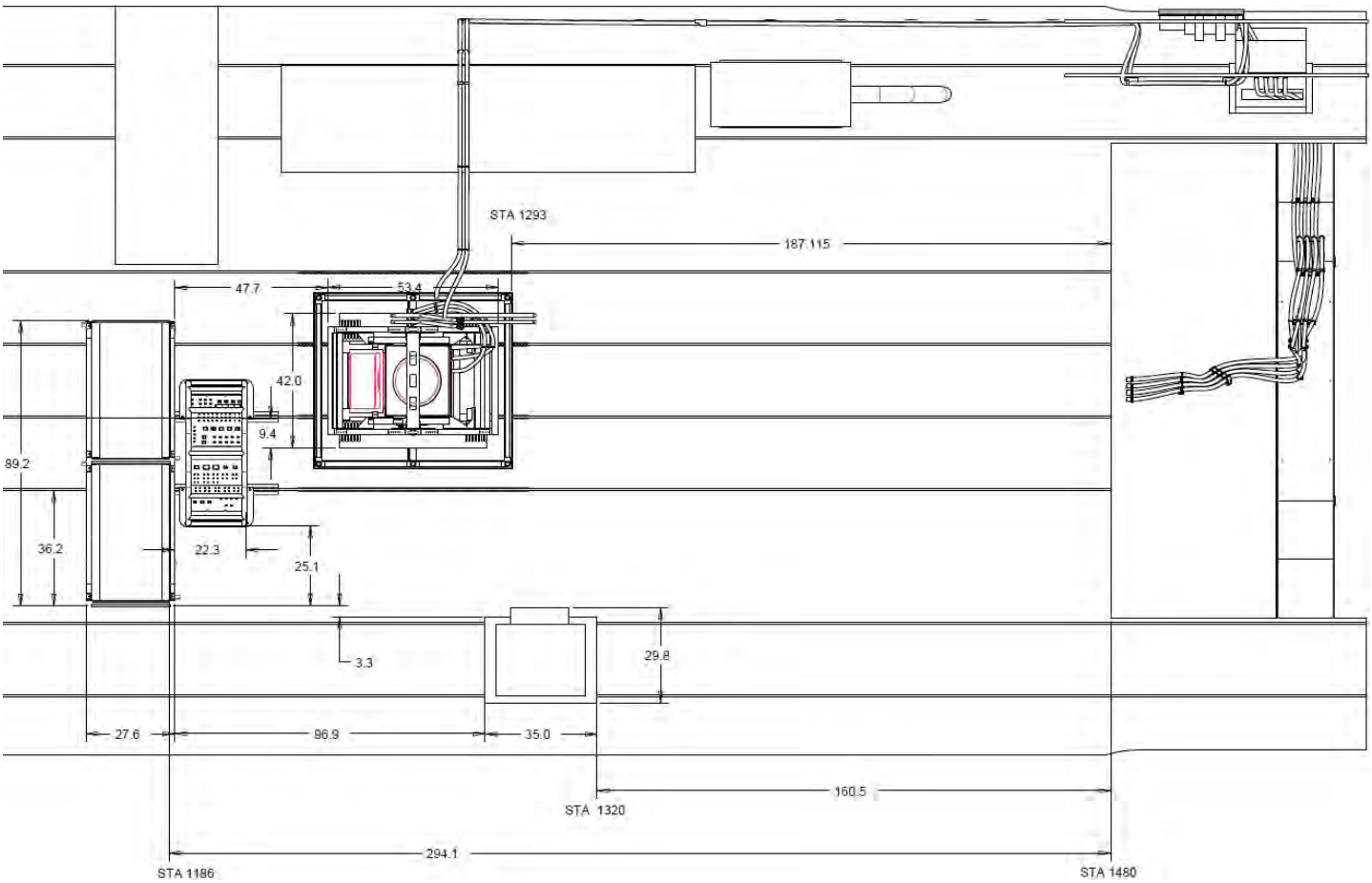

Figure 6-2: Cryocooler Compressor Package Expected Location, dimensioned plan view

In this location, the guard rail may result in a minor noncompliance with the SI Static Envelope defined within SOF-DA-ICD-SE03-002, *Science Instrument Envelope* (GLOBAL_09), and a Request for Deviation or Waiver (RDW) will be pursued, as needed.

The compressor package guard rail assembly is a segmented design that allows the port side of the guard rail to be easily removed for upGREAT installation and removal operations. See Figure 6-3, which depicts the aft- and port-side extents of the Cryocooler compressor package installation, both with and without the port-side guard rail installed.

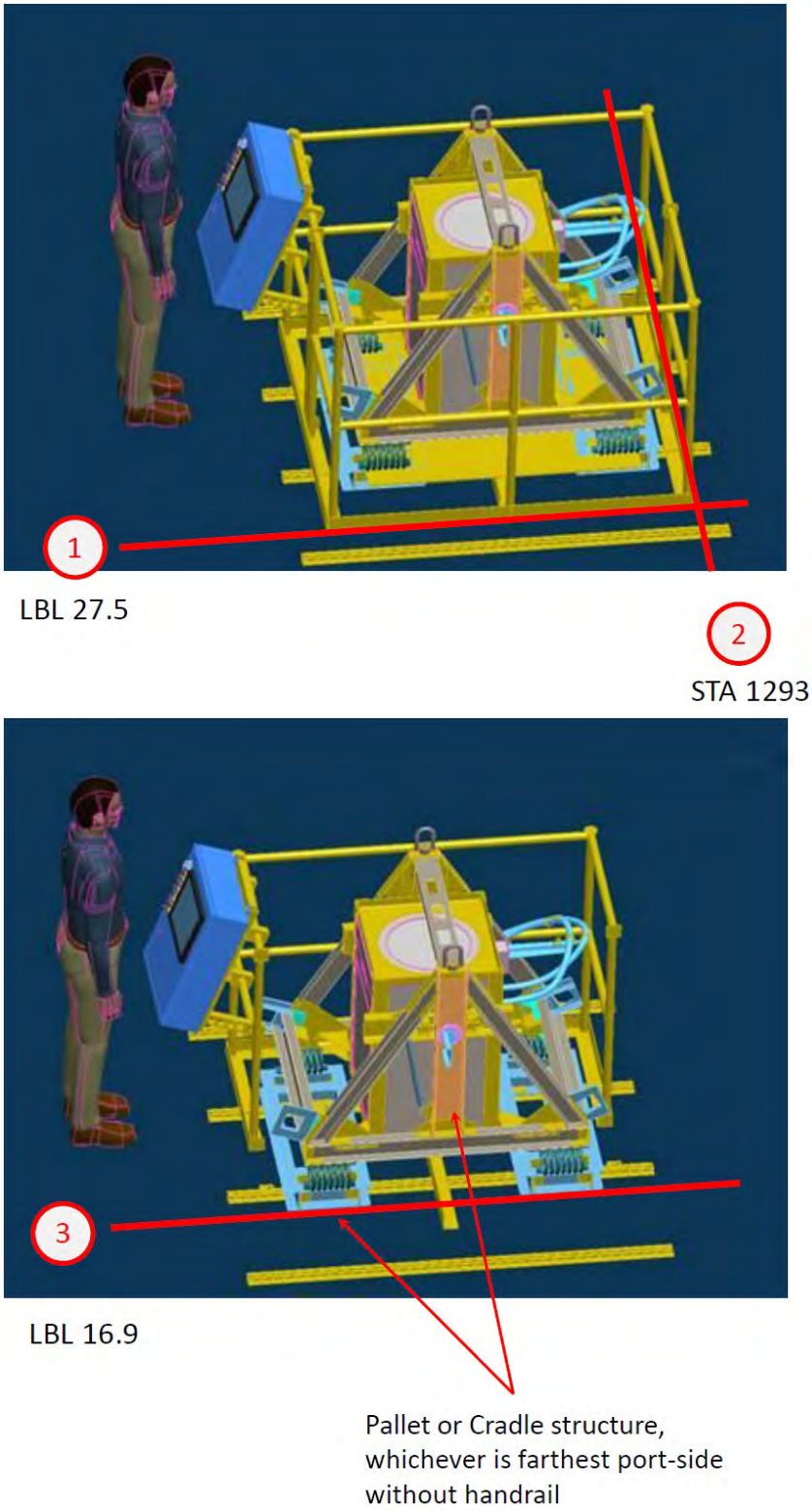

Figure 6-3: Cryocooler Compressor Package Extents (with and without port-side Guard Rail installed)

An analysis has been conducted to assess clearance for the upGREAT SI, on its installation cart, to negotiate the path of the reinforced floor between SOFIA Door 1L and the TA IMF, considering the easily removable portion of the compressor package guard rail assembly.

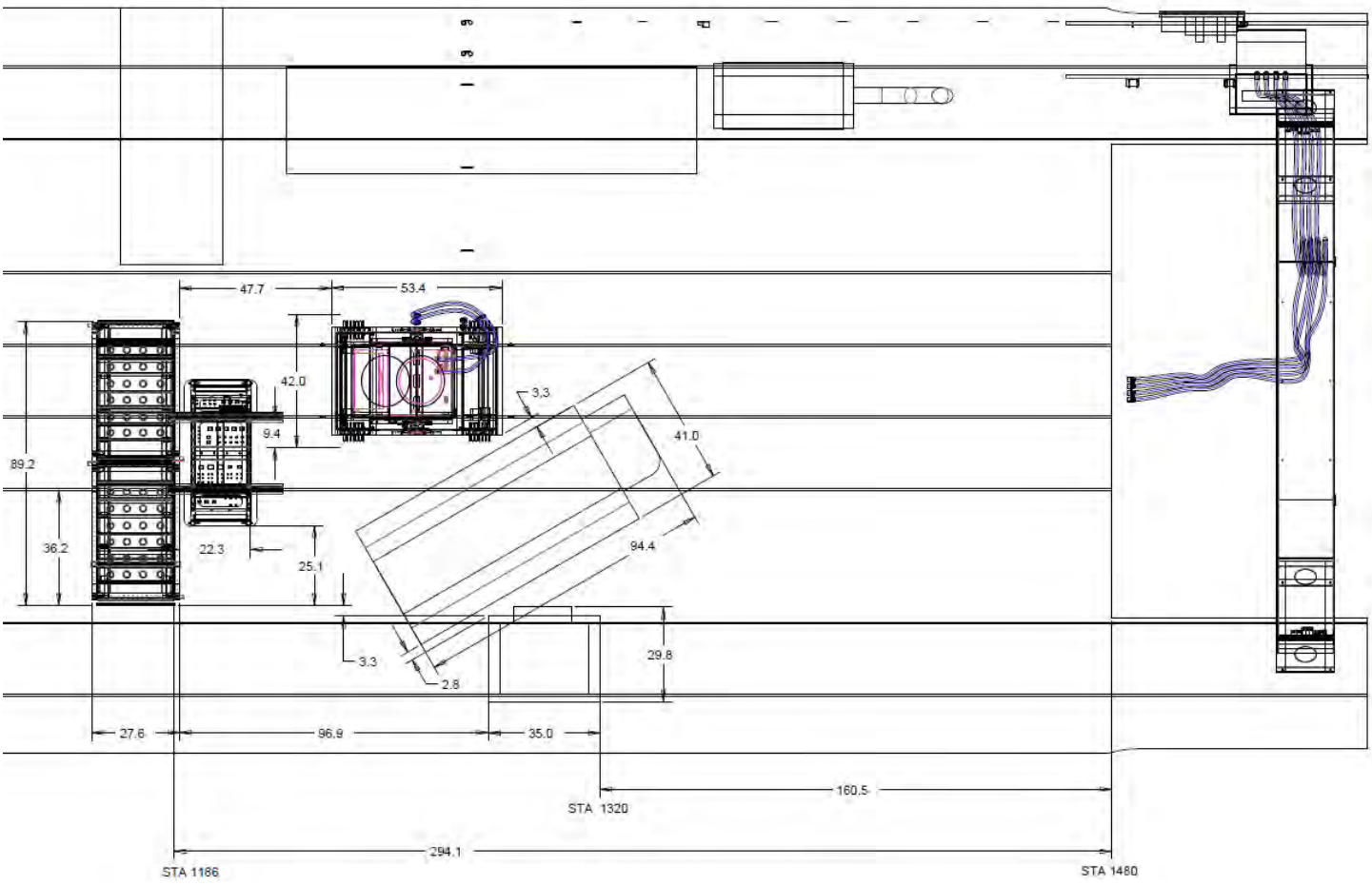

Figure 6-4: Summary of analysis to assess clearance for the upGREAT SI and installation cart

APPENDIX A. ACRONYMS AND ABBREVIATIONS

A/C	Aircraft
A/D	Analog to Digital
BL	Butt Line
CB	Circuit Breaker
CCC	Closed-Cycle Cryocooler
CG	Center of Gravity
CLA	Cable Load Alleviator
COTS	Commercial Off The Shelf
CWP	Counterweight Plate (of TA Balancer Subassembly)
CWR	Counterweight Rack
D/A	Digital to Analog
DESO	Double End Shut-Off (fluid coupling)
EU	Engineering Unit
FC	Frequency Converter
FMEA	Failure Modes & Effects Analysis
FS	Fuselage Station
GREAT	German REceiver for Astronomy at Terahertz frequencies
GSE	Ground Support Equipment
HFA	High Frequency Array (upGREAT channel / cryostat)
HMI	Human Machine Interface
Hz	Hertz (cycles per second)
ICD	Interface Control Document
I/F	Interface
IMF	Instrument Mounting Flange
I/O	Input / Output
kVA	kilo Volt Amperes
LFA	Low Frequency Array (upGREAT channel / cryostat)
LHe	Liquid Helium
mA	milli-Amperes
MCCS	Mission Control Communication System
MOPS	Mission Operations
MPa	Mega-Pascals
MPIfR	Max Planck Institute für Radioastronomie
N/A	Not Applicable
NC	No Connection (unused contact location)
NC	Normally Closed (switch or relay contact)
NO	Normally Open (switch or relay contact)
OPP	Observatory Power Panel
Pa	Pascal (Newtons per square meter)
PDS	Power Distribution System (MCCS subsystem)
PI	Principal Investigator
PLC	Programmable Logic Controller
PRD	Pressure Relief Device

PRV	Pressure Relief Valve
psi	pounds per square inch
QD	Quick Disconnect (fluid coupling)
RDW	Request for Deviation or Waiver
RET	Return
RTB	Return To Base
SI	Science Instrument
SOFIA	Stratospheric Observatory For Infrared Astronomy
TA	Telescope Assembly
TP	Twisted Pair
TSP	Twisted Shielded Pair
USRA	Universities Space Research Association
VAC	Volts Alternating Current
VDC	Volts Direct Current

APPENDIX B. INTERFACE HARDWARE DATA SHEETS

5400 Series
Low Air Inclusion Refrigerant

Eaton's 5400 Series low air inclusion product line is designed for air conditioning, refrigerant, gaseous and fluid transfer applications.

Product Features

- Brazed or threaded end connections for versatility of installation on tubing or hose
- Tubular valve construction for low fluid loss and air inclusion
- Thread together design allows connection and disconnection against pressure
- Lock washer and jam nut standard for optional bulkhead mounting
- Standard seal material: Neoprene
- Guardian Seal™ plating for excellent corrosion resistance

Physical Characteristics

Coupling Size	Max. Operating Pressure Connected		Min. Burst Pressure Connected		Max. Operating Pressure Disconnected Male Half		Female Half		Vacuum Connected Only	Rated Flow		Air Inclusion	Fluid Loss
(in)	(bar)	(psi)	(bar)	(psi)	(bar)	(psi)	(bar)	(psi)	(in./Hg)	(lpm)	(gpm)	cc. max.	cc.max.
1/4	207	3,000	621	9,000	172	2,500	34	500	28	8	2	.10	.05
1/2	121	1,750	359	5,200	121	1,750	28	400	28	53	14	.10	.10
3/4	48	700	145	2,100	55	800	28	400	28	132	35	.30	.10
1	48	700	145	2,100	48	700	21	300	28	284	75	.50	.20

Applications & Markets

- Mobile air conditioning and refrigerant

Flow Data

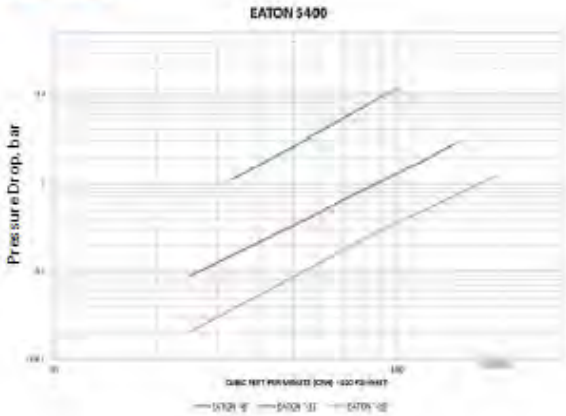

Figure B-1.1 Data Sheet for Eaton / Aeroquip 5400 Series Quick Disconnect (QD) couplings (Sh. 1 of 5)

5400 Series
Low Air Inclusion Refrigerant

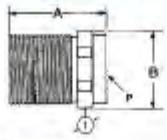

Figure 1

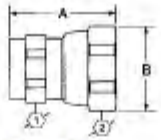

Figure 2

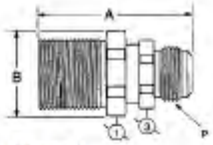

Figure 3

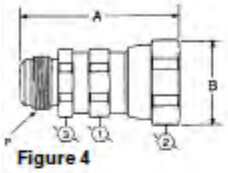

Figure 4

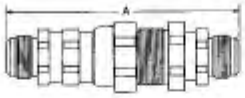

Figure 5

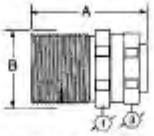

Figure 6

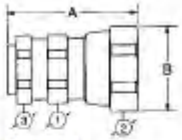

Figure 7

Dimensions – No Adapter

Part Number Neoprene	Coupling Type	Body Size	Type	Fig.	Dimensions A		B		Hex ①		Hex ②		Hex ③	
					mm	(in)	mm	(in)	mm	(in)	mm	(in)	mm	(in)
5400-S2-4	Male	1/4	No Adapter	1	27.4	(1.08)	21.1	(.83)	19.1	(.75)	-	-	-	-
5400-S5-4	Female	1/4	No Adapter	2	33.3	(1.31)	21.1	(.83)	16.0	(.63)	19.1	(.75)	-	-
5400-S2-8	Male	1/2	No Adapter	1	34.8	(1.37)	32.0	(1.26)	29.0	(1.14)	-	-	-	-
5400-S5-8	Female	1/2	No Adapter	2	40.6	(1.60)	33.0	(1.30)	26.0	(1.02)	30.0	(1.18)	-	-
5400-S2-12	Male	3/4	No Adapter	1	44.2	(1.74)	46.4	(1.83)	41.0	(1.64)	-	-	-	-
5400-S5-12	Female	3/4	No Adapter	2	55.1	(2.17)	45.0	(1.77)	35.0	(1.38)	41.0	(1.61)	-	-
5400-S2-16	Male	1	No Adapter	1	46.5	(1.83)	53.0	(2.09)	48.0	(1.89)	-	-	-	-
5400-S5-16	Female	1	No Adapter	2	61.1	(2.41)	56.0	(2.20)	45.0	(1.77)	50.0	(1.97)	-	-

Dimensions – SAE 37° (JIC)

Part Number Buna-N	Coupling Type	Body Size	Port Size	Thread	Type	Fig.	Dimensions A		B		Hex ①		Hex ②		Hex ③	
*Couplings must be ordered by components as shown on page 150.							mm	(in)	mm	(in)	mm	(in)	mm	(in)	mm	(in)
5410-S17-4-4*	Male	1/4	7/16	7/16-20	SAE 37° (JIC)	3	47.8	(1.88)	21.1	(.83)	19.1	(.75)	-	-	16.0	(.63)
5410-S14-4-4*	Female	1/4	7/16	7/16-20	SAE 37° (JIC)	4	49.0	(1.93)	21.1	(.83)	16.0	(.63)	19.1	(.75)	15.7	(.62)
5410-4-4*	Complete	1/4	7/16	7/16-20	SAE 37° (JIC)	5	89.9	(3.54)	-	-	-	-	-	-	-	-
5410-S17-6-4*	Male	1/4	9/16	9/16-18	SAE 37° (JIC)	3	48.0	(1.89)	21.1	(.83)	19.1	(.75)	-	-	16.0	(.63)
5410-S14-6-4*	Female	1/4	9/16	9/16-18	SAE 37° (JIC)	4	49.3	(1.94)	21.1	(.83)	16.0	(.63)	19.1	(.75)	15.7	(.62)
5410-6-4*	Complete	1/4	9/16	9/16-18	SAE 37° (JIC)	5	90.4	(3.56)	-	-	-	-	-	-	-	-
5410-S17-6-8*	Male	1/2	9/16	9/16-18	SAE 37° (JIC)	3	55.4	(2.18)	31.8	(1.25)	28.7	(1.13)	-	-	25.4	(1.00)
5410-S14-6-8*	Female	1/2	9/16	9/16-18	SAE 37° (JIC)	4	61.7	(2.43)	33.3	(1.31)	25.4	(1.00)	30.2	(1.19)	25.4	(1.00)
5410-6-8*	Complete	1/2	9/16	9/16-18	SAE 37° (JIC)	5	107.4	(4.23)	-	-	-	-	-	-	-	-
5410-S17-8-8*	Male	1/2	3/4	3/4-16	SAE 37° (JIC)	3	57.9	(2.28)	31.8	(1.25)	28.7	(1.13)	-	-	25.4	(1.00)
5410-S14-8-8*	Female	1/2	3/4	3/4-16	SAE 37° (JIC)	4	64.3	(2.53)	33.3	(1.31)	25.4	(1.00)	30.2	(1.19)	25.4	(1.00)
5410-8-8*	Complete	1/2	3/4	3/4-16	SAE 37° (JIC)	5	112.8	(4.44)	-	-	-	-	-	-	-	-
5410-S17-10-12*	Male	3/4	7/8	7/8-14	SAE 37° (JIC)	3	69.9	(2.75)	46.5	(1.83)	41.4	(1.63)	-	-	35.1	(1.38)
5410-S14-10-12*	Female	3/4	7/8	7/8-14	SAE 37° (JIC)	4	80.3	(3.16)	45.7	(1.80)	35.1	(1.38)	41.1	(1.62)	35.1	(1.38)
5410-10-12*	Complete	3/4	7/8	7/8-14	SAE 37° (JIC)	5	135.4	(5.33)	-	-	-	-	-	-	-	-
5410-S17-12-12*	Male	3/4	1 1/16	1 1/16-12	SAE 37° (JIC)	3	72.6	(2.86)	46.5	(1.83)	41.4	(1.63)	-	-	35.1	(1.38)
5410-S14-12-12*	Female	3/4	1 1/16	1 1/16-12	SAE 37° (JIC)	4	83.1	(3.27)	45.7	(1.80)	35.1	(1.38)	41.1	(1.62)	35.1	(1.38)
5410-12-12*	Complete	3/4	1 1/16	1 1/16-12	SAE 37° (JIC)	5	140.7	(5.54)	-	-	-	-	-	-	-	-
5410-S17-16-16*	Male	1	1 5/16	1 5/16-12	SAE 37° (JIC)	3	75.9	(2.99)	53.3	(2.10)	47.8	(1.88)	-	-	44.5	(1.75)
5410-S14-16-16*	Female	1	1 5/16	1 5/16-12	SAE 37° (JIC)	4	89.7	(3.53)	56.9	(2.24)	44.5	(1.75)	50.8	(2.00)	44.5	(1.75)
5410-16-16*	Complete	1	1 5/16	1 5/16-12	SAE 37° (JIC)	5	149.6	(5.89)	-	-	-	-	-	-	-	-

Figure B-1.2 Data Sheet for Eaton / Aeroquip 5400 Series Quick Disconnect (QD) couplings (Sh. 2 of 5)

5400 Series
Low Air Inclusion Refrigerant

Dimensions – Braze Tubing Adapter

Part Number Neoprene	Coupling Type	Body Size	Tube O.D. Size	Type	Fig.	Dimensions A mm	A (in)	B mm	B (in)	Hex ① mm	Hex ① (in)	Hex ② mm	Hex ② (in)	Hex ③ mm	Hex ③ (in)
*Couplings must be ordered by components as shown on page 150.															
5401-S17-4-4*	Male	1/4	1/4	Braze Tubing Adapter	6	38.6	(1.52)	21.1	(.83)	19.1	(.75)	-	-	16.0	(.63)
5401-S14-4-4*	Female	1/4	1/4	Braze Tubing Adapter	7	39.9	(1.57)	21.1	(.83)	16.0	(.63)	19.1	(.75)	16.0	(.63)
5401-S17-6-4*	Male	1/4	3/8	Braze Tubing Adapter	6	38.6	(1.52)	21.1	(.83)	19.1	(.75)	-	-	16.0	(.63)
5401-S14-6-4*	Female	1/4	3/8	Braze Tubing Adapter	7	39.9	(1.57)	21.1	(.83)	16.0	(.63)	19.1	(.75)	16.0	(.63)
5410-S17-6-8*	Male	1/2	3/8	Braze Tubing Adapter	6	44.5	(1.75)	33.3	(1.31)	28.7	(1.13)	-	-	25.4	(1.00)
5401-S14-6-8*	Female	1/2	3/8	Braze Tubing Adapter	7	50.8	(2.00)	33.3	(1.31)	25.4	(1.00)	30.2	(1.19)	25.4	(1.00)
5401-S17-8-8*	Male	1/2	1/2	Braze Tubing Adapter	6	44.5	(1.75)	33.3	(1.31)	28.7	(1.13)	-	-	25.4	(1.00)
5401-S14-8-8*	Female	1/2	1/2	Braze Tubing Adapter	7	50.8	(2.00)	33.3	(1.31)	25.4	(1.00)	30.2	(1.19)	25.4	(1.00)
5401-S17-10-12*	Male	3/4	5/8	Braze Tubing Adapter	6	62.7	(2.47)	45.7	(1.80)	41.4	(1.63)	-	-	35.1	(1.38)
5401-S14-10-12*	Female	3/4	5/8	Braze Tubing Adapter	7	73.2	(2.88)	45.7	(1.80)	35.1	(1.38)	41.4	(1.63)	35.1	(1.38)
5401-S17-12-12*	Male	3/4	3/4	Braze Tubing Adapter	6	62.7	(2.47)	45.7	(1.80)	41.4	(1.63)	-	-	35.1	(1.38)
5401-S14-12-12*	Female	3/4	3/4	Braze Tubing Adapter	7	73.2	(2.88)	45.7	(1.80)	35.1	(1.38)	41.4	(1.63)	35.1	(1.38)
5401-S17-16-16*	Male	1	1	Braze Tubing Adapter	6	71.1	(2.80)	56.9	(2.24)	47.8	(1.88)	-	-	44.5	(1.75)
5401-S14-16-16*	Female	1	1	Braze Tubing Adapter	7	84.8	(3.34)	56.9	(2.24)	44.5	(1.75)	50.8	(2.00)	44.5	(1.75)

Dust Caps and Dust Plugs

Dust Cap with Gasket	Dust Plug with Gasket	Body Size
5400-S6-4	5400-S8-4	1/4
5400-S6-8	5400-S8-8	-1/2
5400-S6-12	5400-S8-12	3/4
5400-S6-16	5400-S8-16	1

Dust Cap

Dust Plug

Adapter SAE 37° (JIC)

O-Ring	Brass	Steel	Body Size	Thread	Tube O.D. Size
22546-12	202220-4-4B	202220-4-4S	1/4	7/16-20	1/4
22546-12	202220-6-4B	202220-6-4S	1/4	9/16-18	3/8
22546-17	-	202220-6-8S	1/2	9/16-18	3/8
22546-17	202220-8-8B	202220-8-8S	1/2	3/4-16	1/2
22546-23	-	202220-10-12S	3/4	7/8-14	5/8
22546-23	-	202220-12-12S	3/4	1 1/16-12	3/4
22546-28	-	202220-16-16S	3/4	1 3/16-12	1

Adapter SAE 37° (JIC)

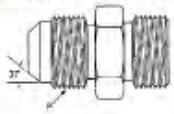

Adapter – Braze

O-Ring	Brass	Steel	Body Size	Thread	Tube O.D. Size
22546-12	202208-4-4B	-	1/4	1/2-20	1/4
22546-17	202208-4-8B	-	1/2	7/8-20	1/2
22546-12	202208-6-4B	-	1/4	1/2-20	3/8
22546-17	202208-6-8B	-	1/2	7/8-20	3/8
22546-17	202208-8-8B	-	1/2	7/8-20	1/2
2254617	202208-10-8B	202208-10-8S	1/2	7/8-20	5/8
22546-23	202208-10-12B	202208-10-12S	3/4	1 1/4-18	5/8
22546-23	202208-12-12B	-	3/4	1 1/4-18	3/4
22546-23	202208-14-12B	-	1	1 1/4-18	7/8
22546-28	202208-14-16B	-	1	1 19/32-20	7/8
22546-28	202208-16-16B	-	1	1 19/32-20	1
22546-28	202208-18-16B	-	1	1 19/32-20	1 1/8
22546-28	202208-20-16B	-	1	1 19/32-20	1 3/16
22546-28	202208-22-16B	-	1	1 19/32-20	1 1/4

Adapter – Braze
(O-Ring Required)

Hose Fitting SAE 100R5†

O-Ring	Fitting Assembly	Body Size	Hose Size	Thread	Dimensions D mm	D (in)
22546-12	487-4-4S	1/4	-4	1/2-20	23.4	(.92)
22546-12	487-4-6S	1/4	-6	1/2-20	24.4	(.96)
22546-17	487-8-6S	1/2	-6	7/8-20	24.4	(.96)
22546-17	487-8-8S	1/2	-8	7/8-20	26.9	(1.06)
22546-23	487-12-10S	3/4	-10	1 1/4-18	27.2	(1.07)
22546-23	487-12-12S	3/4	-12	1 1/4-18	27.2	(1.07)
22546-28	487-16-16S	1	-16	1 19/32-20	25.7	(1.01)

†Additional dash styles available.

Hose Fitting SAE 100R5
(O-Ring Required)

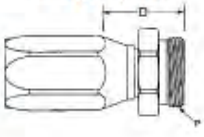

Figure B-1.3 Data Sheet for Eaton / Aeroquip 5400 Series Quick Disconnect (QD) couplings (Sh. 3 of 5)

5400 Series
Low Air Inclusion Refrigerant

For assemblies, order by components as shown by base number and dash (-) size below. Example, if a 5401-S14-10-12 is required, order as components, (1) 5400-S5-12, (1) 202208-10-12B Adapter and (1) 22546-23 O-Ring.

Assembly Part Number	5400-S2 Female Half	Quantity	5400-S5 Male Half	Quantity	202208-Brass Braze-On Adapter	Quantity	202220-Steel 37° SAE Adapter	Quantity	22546 O-Ring	Quantity
5401-S14-10-12			-12	1	-10-12B	1			-23	1
5401-S14-10-8			-8	1	-10-8B				-17	1
5401-S14-12-12			-12	1	-12-12B	1			-23	1
5401-S14-16-16			-16	1	-16-16B	1			-28	1
5401-S14-4-4			-4	1	-4-4B	1			-12	1
5401-S14-6-4			-4	1	-6-4B	1			-12	1
5401-S14-6-8			-8	1	-6-8B	1			-17	1
5401-S14-8-8			-8	1	-8-8B	1			-17	1
5401-S17-10-12	-12	1			-10-12B	1			-23	1
5401-S17-10-8	-8	1			-10-8B	1			-17	1
5401-S17-12-12	-12	1			-12-12	1			-23	1
5401-S17-14-16	-16	1			-16-16	1			-28	1
5401-S17-4-4	-4	1			-4-4B	1			-17	1
5401-S17-6-4	-4	1			-6-4B	1			-12	1
5401-S17-6-8	-8	1			-6-8B	1			-17	1
5401-S17-8-8	-8	1			-8-8B	1			-17	1
5410-12-12	-12	1	-12	1			-12-12S	2	-23	2
5410-16-16	-16	1	-16	1			-16-16S	2	-28	2
5410-4-4	-4	1	-4	1			-4-4S	2	-12	2
5410-6-8	-8	1	-8	1			-6-8S	2	-17	2
5410-8-8	-8	1	-8	1			-8-8S	2	-17	2
5410-S14-10-12			-12	1			-10-12S	1	-23	1
5410-S14-12-12			-12	1			-12-12S	1	-23	1
5410-S14-16-16			-16	1			-16-16S	1	-28	1
5410-S14-4-4			-4	1			-4-4S	1	-12	1
5410-S14-6-4			-4	1			-6-4S	1	-12	1
5410-S14-6-8			-8	1			-6-8S	1	-17	1
5410-S14-8-8			-8	1			-8-8S	1	-17	1
5410-S17-10-12	-12	1					-10-12S	1	-23	1
5410-S17-12-12	-12	1					-12-12S	1	-23	1
5410-S17-16-16	-16	1					-16-16S	1	-28	1
5410-S17-4-4	-4	1					-4-4S	1	-12	1
5410-S17-6-4	-4	1					-6-4S	1	-12	1
5410-S17-6-8	-8	1					-6-8S	1	-17	1
5410-S17-8-8	-8	1					-8-8S	1	-17	1

Figure B-1.4 Data Sheet for Eaton / Aeroquip 5400 Series Quick Disconnect (QD) couplings (Sh. 4 of 5)

5400 Series
Low Air Inclusion Refrigerant

Assembly Instructions/Component Part Numbers

Typical Male Coupling Half (S2)

Assembly Instructions

Steps:

1. After tubing or hose has been connected to adapters ①and ⑫, install O-Rings ② and ⑨* on adapters. Be sure O-Rings are not twisted.
2. Oil O-Rings ② and ⑨ liberally with system fluid to prevent them from scuffing and tearing when coupling body is threaded on adapter.
3. S2 Half—Lubricate poppet face with system fluid. Insert poppet valve assembly ③ into body ④. Tighten body ④ on adapter ①. After body and adapter make metal-to-metal contact, tighten by rotating body ④ 1/8" with respect to adapter ① or torque per table value.

   S5 Half—Oil O-Ring ⑨* liberally with system fluid. Insert valve and sleeve assembly 10 into body ⑧. Tighten body ⑧ on adapter ⑫. After body and adapter make metal-to-metal contact, tighten by rotating body ⑧ 1/8" with respect to adapter ⑫ or torque per table value.
4. Coupling Connection—Lubricate gasket seal ⑤ on 5400-S2 half with system fluid. Thread union nut ⑧ on 5400-S2 half. Tighten union nut to torque values shown in table. Be sure S2 and S5 bodies do not rotate during connection.

Typical Female Coupling Half (S5)

Bulkhead Mounting—S2 Half

Install lock washer ⑥ on S2 half. Insert S2 half through bulkhead, and tighten jam nut ⑦ so that lock washer teeth are fully compressed.

NOTE: Lock washer 6 must be between hex of S2 half and bulkhead.

Maximum Bulkhead Thickness

Body Size	Lock Washer Installed	Lock Washer Not Used
1/4	.206	.256
1/2	.136	.203
3/4	.232	.292
1	.101	.161

Torque Values

Recommended torque values in ft. lbs., are listed below.

Dash Size	Adapter to Body: Braze Type or Aluminum	Adapter to Body: Non-braze Type Steel or Brass	S2 Half to S5 Half
–4	6–8	12–15	10–12
–8	15–20	35–45	35–37
–12	35–40	45–55	45–47
–16	50–60	55–65	65–67

*IMPORTANT: Generous lubrication is required for all gaskets and O-Rings. Use refrigeration oil only when used in refrigerant system.

Component Part Numbers

Item Number	Dash Size→ O.D. Tube Size→	–4 1/4"–3/8"	–8 1/4"–5/8"	–12 5/8"–7/8"	–16 7/8"–13/8"	Line Ref.
	Typical Male Half					1
1	Tubing Adapter	202208–*–4	202208–*–8	202208–*–12	202208–*–16	2
2	O-Ring	22546–12	22546–17	22546–23	22546–28	3
3	Poppet Valve Assembly	5400–S20–4	5400–S20–8	5400–S20–12	5400–S20–16	4
4	Body	5400–17–4	5400–17–8	5400–17–12	5400–17–16	5
5	Gasket Seal	22008–4	22008–8	22008–12	22008–16	6
6	Lock Washer	5400–54–4S	5400–54–8S	5400–54–12S	5400–54–16S	7
7	Jam Nut	5400–53–4S	5400–53–8S	5400–53–12S	5400–53–16S	8
	Typical Female Half					9
8	Union Nut and Body Assembly	5400–S16–4	5400–S16–8	5400–S16–12	5400–S16–16	10
9	O-Ring	22546–10	22546–112	22546–116	22546–214	11
10	Valve and Sleeve Assembly	5400–S19–4	5400–S19–8	5400–S19–12	5400–S19–16	12
11	O-Ring	22546–12	22546–17	22546–23	22546–28	13
12	Tubing Adapter	202208–*–4	202208–*–8	202208–*–12	202208–*–16	14

*Specify O.D. Tubing size of adapter required in 16th of an inch. Example: –4 coupling with 3/8" O.D. tubing is 6/16 or –6. Part number is then 202208–6–4.

Figure B-1.5 Data Sheet for Eaton / Aeroquip 5400 Series Quick Disconnect (QD) couplings (Sh. 5 of 5)

Typ
RS 321

Ringwellschläuche Edelstahl, mittlere Ausführung, eng gewellt, hochflexibel

HYDRA Ringwellschlauchleitung RS 321 L12 mit Umflechtung
HYDRA Ringwellschlauchleitung RS 321 L00 ohne Umflechtung

Passende Anschlussarmaturen:
—> Seiten 28-81 (bitte auswählen)

Konstruktion:
Ringwellschlauch, mittlere Ausführung, normal gewellt, hochflexibel
Typ RS 321 L12: mit einfacher Umflechtung
Typ RS 321 L00: ohne Umflechtung

Werkstoff:
- Schlauch: Edelstahl, Werkstoff-Nr. 1.4571 oder 1.4404;
- Geflecht: Edelstahl, Werkstoff-Nr. 1.4301
- Endhülse: Edelstahl, Werkstoff-Nr. 1.4301

Temperaturbereich:
–270 °C bis max. 600 °C (nur für den Schlauch) abhängig von der ausgewählten Anschlussarmatur, dem Medium und dem Betriebsdruck.

Zulassungen:
für Gas —> s. Seite 82 ff (Kapitel 3.2 Gas), für ortsfeste Wasserlöschanlagen –> s. Seite 174 ff (Kapitel 4 Brandschutz)

CE-Kennzeichnung:
Auf Wunsch (bitte Anfrage-Spezifikation, Seite 236, benutzen)

Ausschreibungstext:

HYDRA Ringwellschlauchleitung Edelstahl 1.4571 oder 1.4404
CE-Kennzeichnung, Kategorie _____, Modul _____ (wenn erforderlich)
Typ RS _____ L _____
DN _____ NL _____
beiderseits _____ (Anschlussart) _____ (Typ)
einerseits _____ (Anschlussart) _____ (Typ)
andererseits _____ (Anschlussart) _____ (Typ)

Lieferung: kurzfristig.

Bei Bestellung bitte angeben:
1. Typ, Nennweite (DN), Nennlänge (NL)
2. Typ der Anschlussarmaturen
3. Verwendungszweck, Medium, Betriebsdruck, Betriebstemperatur
4. Bei CE-Kennzeichnung die entsprechende Kategorie nach nach DGRL 97/23/EG

Figure B-2.1 Data Sheet for Witzenmann GmbH HYDRA RS321 Flexible He lines (Sheet 1 of 2)

Mit Umflechtung

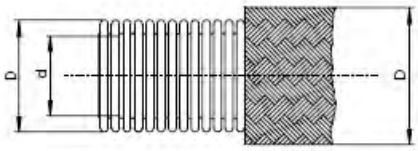

Ohne Umflechtung

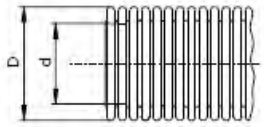

Typ
RS 321

Nenn-weite	Typ	Innen-durch-messer	Außen-durch-messer	zulässige Ab-weichung	Mindest-Biegeradius r_{min} einmalige Biegung	Nenn-Biegeradius r_n häufige Bewegung	zulässiger Betriebs-druck P_{zul} bei 20°C*	Gewicht ca.	Herstell-länge max.
DN		d	D, D_1	d, D, D_1					
		mm	mm	mm	mm	mm	bar	kg/m	m
6	RS 321L12	6,1	11,2	±0,2	25	70	153	0,149	70
	RS 321L00		9,9		20		16	0,089	
8	RS 321L12	8,2	13,9	±0,2	30	90	176	0,216	70
	RS 321L00		12,5		25		12	0,106	
10	RS 321L12	10,1	15,8	±0,2	35	100	131	0,242	70
	RS 321L00		14,4		30		7	0,124	
12	RS 321L12	12,4	18,5	±0,2	40	110	85	0,284	70
	RS 321L00		17,1		35		5	0,155	
16	RS 321L12	16,2	23,6	±0,2	50	120	80	0,437	70
	RS 321L00		22,0		40		5	0,234	
20	RS 321L12	20,2	28,4	±0,3	55	130	50	0,534	70
	RS 321L00		26,8		50		3	0,306	
25	RS 321L12	25,1	34,2	±0,3	65	150	65	0,830	70
	RS 321L00		32,2		60		2,5	0,421	
32	RS 321L12	34,2	43,0	±0,3	75	230	46	0,971	70
	RS 321L00		41,0		70		2	0,504	
40	RS 321L12	40,0	52,1	±0,4	90	240	45	1,740	20
	RS 321L00		49,8		80		1,6	1,050	
50	RS 321L12	50,1	62,8	±0,5	110	260	35	2,050	20
	RS 321L00		60,5		100		1	1,290	

Größere Nennweiten auf Anfrage lieferbar.
* Abminderungsfaktoren bei höherer Betriebstemperatur und/oder dynamischer Belastung —> s. Seite 243.

Figure B-2.2 Data Sheet for Witzenmann GmbH HYDRA RS321 Flexible He lines (Sheet 2 of 2)

TVP00R, CTVP00R, BS-C6170 D38999/20 JN1034A

Wall mounting receptacle

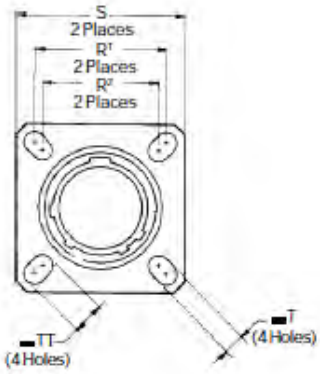

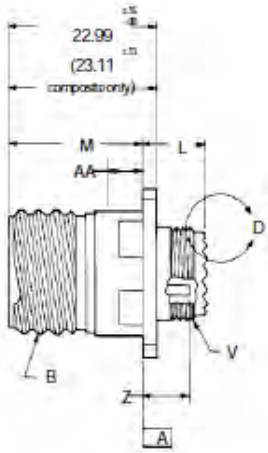

*TVP00RW...	Olive Drab Aluminium
*TVPS00RF...	Nickel Plated Aluminium
*TVPS00RB...	Marine Aluminium Bronze
*TVPS00RS...	Nickel Plated Stainless
*TVPS00RK...	Firewall Stainless Steel
*CTVP00RW...	Olive Drab Composite
*CTVPS00RF...	Electroless Nickel Composite
*BS9522G0003C6170...	BS Specification
*D38999/20...	Mil Specification
*JN1034A...	Olive Drab Aluminium
*CECC75-201-002B	Marine Aluminium Bronze

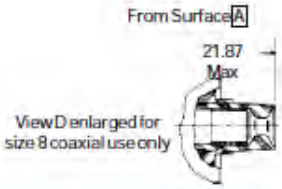

* To complete order see "how to order" pages.

0.01 Dia (M)

Shell Size	MS Shell Size Code	B Thread Class 2A 0.1P-0.3L-TS (Plated)	L Max	M +.00 -.13	M Composite +.00 -.13	R¹	R²	S ±.25	T -.20 -.13	Z Max	TT +.20 -.13	V Thread Metric	AA Max Panel Thickness
9	A	.6250	11.91	20.83	19.69	18.26	15.09	24.1	3.25	3.89	5.49	M12X1-6g	5.94
11	B	.7500	11.91	20.83	19.69	20.62	18.26	26.5	3.25	3.89	4.93	M15X1-6g	5.94
13	C	.8750	11.91	20.83	19.69	23.01	20.62	28.9	3.25	3.89	4.93	M18X1-6g	5.94
15	D	1.0000	11.91	20.83	19.69	24.61	23.01	31.3	3.25	3.89	4.93	M22X1-6g	5.94
17	E	1.1875	11.91	20.83	19.69	26.97	24.61	33.7	3.25	3.89	4.93	M25X1-6g	5.94
19	F	1.2500	11.91	20.83	19.69	29.36	26.97	36.9	3.25	3.89	4.93	M28X1-6g	5.94
21	G	1.3750	12.70	20.07	18.92	31.75	29.36	40.1	3.25	4.65	4.93	M31X1-6g	5.18
23	H	1.5000	12.70	20.07	18.92	34.93	31.75	43.3	3.91	4.65	6.15	M34X1-6g	5.18
25	J	1.6250	12.70	20.07	18.92	38.10	34.93	46.4	3.91	4.65	6.15	M37x1-6g	5.18

All dimensions for reference only

Designates true position dimensioning

Figure B-3 Data Sheet for D38999/20ZH55PN bulkhead receptacle for SI interface with Cryocooler control system